SYNERGY 5 SPOT

DTS

User's Manual rel 1.0 **GB**

CE

INDEX:

1- SYMBOLS

Graphic symbols used on this manual:

THIS SYMBOL INDICATES A HOT SURFACE

THIS SYMBOL INDICATES ELECTRIC SHOCK RISK

THIS SYMBOL INDICATES GENERAL RISK

THIS SYMBOL MEANS “SUITABLE FOR MOUNTING ON NORMALLY FLAMMABLE SURFACES”

THIS SYMBOL MEANS “SUITABLE FOR INDOOR USE ONLY”

t_a 40°C

THIS SYMBOL INDICATES THE MAXIMUM OPERATING AMBIENT TEMPERATURE

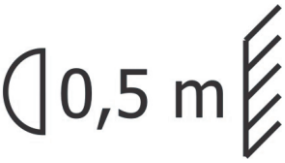

THIS SYMBOL INDICATES THE MINIMUM DISTANCE FROM THE OBJECTS AND THE PEOPLE LIT BY THE LIGHT BEAM

THIS SYMBOL MEANS “DO NOT STARE AT THE OPERATING LIGHT SOURCE”

Risk Group 2

THIS SYMBOL INDICATES PHOTOBIOLOGICAL SAFETY

THIS SYMBOL INDICATES THE EUROPEAN COMMUNITY DIRECTIVE 2012/19/EU ON WASTE ELECTRICAL AND ELECTRONIC EQUIPMENT (WEEE)

THIS SYMBOL MEANS "DISPOSE THE INTERNAL BATTERY AT THE END OF ITS LIFE ACCORDING TO THE REGULATION IN FORCE"

2- GENERAL WARNING

Read the instruction contained in this user manual carefully, as they give important information regarding safety during installation, use and maintenance.
The unit is not for household use and must be installed by a qualified electrician or experienced person.
The device must always be equipped with an efficient ground connection.

WARNING!
NEVER EXPOSE THE FRONT LENS TO SUNLIGHT FROM ANY ANGLE TO AVOID DAMAGE OF HEAD INTERNAL PARTS.

Front lens could become powerful magnifying glass if exposed towards the sun or any strong artificial light source; this can cause damage of head internal parts, even for few seconds and even when the unit is off.
The last command before switch off: point the front lens down towards the ground.

3- GENERAL WARRANTY CONDITIONS

The unit is guaranteed for 36 months from the date of purchase against manufacturing material defects.

4- TECHNICAL FEATURES

DTS Product Code:
03.MS022 SYNERGY 5 SPOT

OUTPUT
• 420 W pure white LED source (7000 K 16.500 Lumens output)
• Double CRI (DMX-selectable): CRI >90 or CRI >75
• Average LED life: 50,000 hours (70% lumen output)

OPTICAL GROUP
• 5.5° - 43° linear zoom with autofocus
• Linear soft frost filter (Medium and Heavy frost available on demand)
• Electronic dimmer / shutter / strobe (0.3 to 33.3 flash/sec)

COLOR GENERATION
• Linear CMY
• Linear CTO (3000 K – 7000 K)
• Gel filter emulation
• 6-color wheel
• Two-color generation

DYNAMIC EFFECTS
• Dynamove FX Engine (DTS Patent pending)
• Virtual Animation Wheel
• Customizable rotating 6-gobo wheel
• Fixed 13-gobo wheel
• Circular 24-facet rotating prism
• Linear 6-facet rotating prism

CONTROL
• LCD graphic display + 4 soft keys; Auto-flip
• Art-Net 4, sACN, RDM/DMX 512 protocols
• Internal operating system updatable via DTS dongle firmware uploader
• Li-Fe backup battery for controlling the display settings even when the unit is not powered

DMX
• 36 DMX channels

PAN & TILT
• Pan: 540°: 2.7 sec.
• Tilt: 240°: 1.6 sec.
• Tri-phase stepper motor technology
• 16-bit resolution
• Selectable speed ranges
• Pan / Tilt lock

POWER SUPPLY
• Full-range 100-240Vac 50-60 Hz
• Power consumption: 580W max

CONNECTIONS
• DMX: XLR 3-pole and 5-pole In / Out panel connectors
• Power supply: powerCON TRUE1 In / Out panel connectors
• Art-Net / sACN: etherCON RJ45 panel connector

INTERNAL SAFETY DEVICES
Overvoltage and overtemperature circuits protection

OPERATING TEMPERATURE
-10° / 40°C

PHYSICAL
• IP20
• Weight: 32 Kg (70.4 lbs)
Finishing: Black

Dimensions

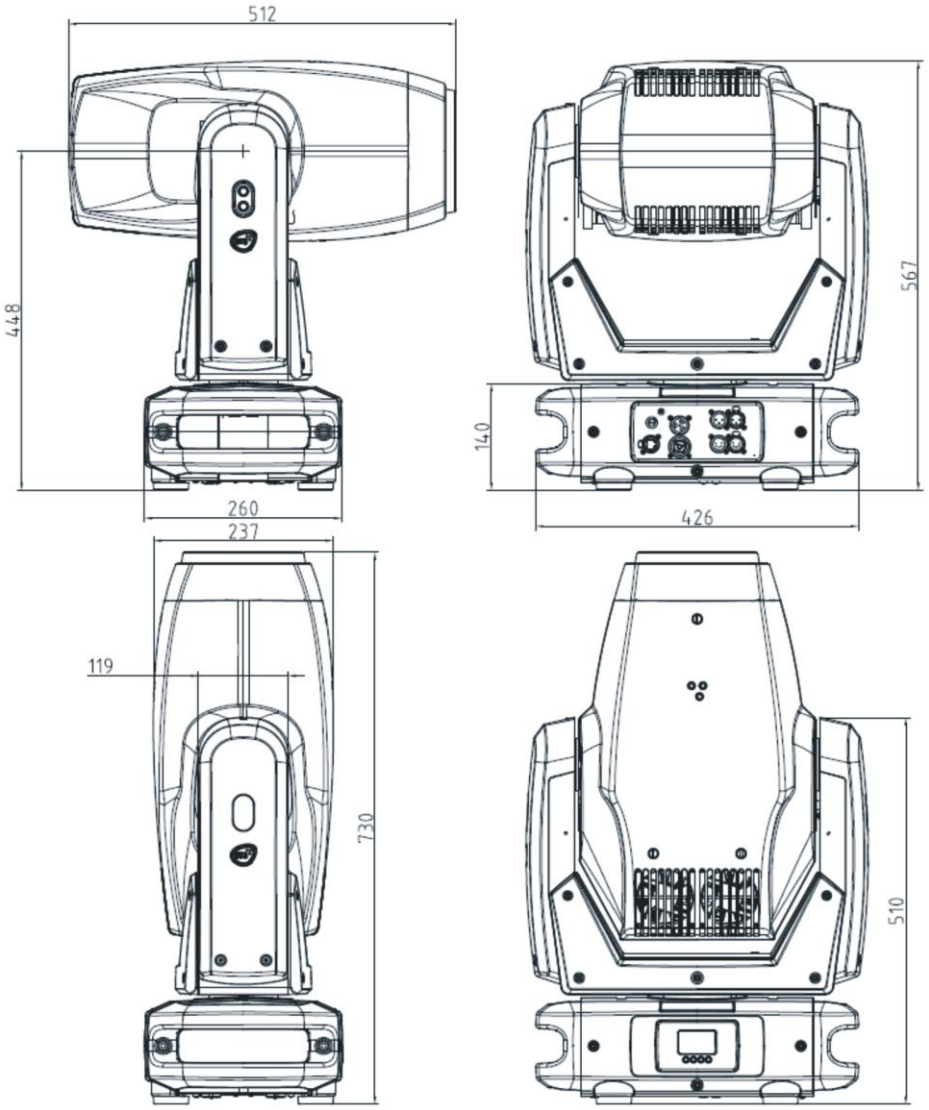

5- ACCESSORIES

As standard
1 x PowerCON TRUE1 female cable connector (Code 0520P066)
1 x XLR 5 pins female cable connector (Code 0508B147)
1 x XLR 5 pins female cable connector (Code 0508B148)
2 x Omega clamp with “Fast Lock” connection 1/4 turn (Code 02K00549)
1 x User’s manual

Optional (on request)
• Flightcase for 2 units (Code 0521C073)
• Synergy Protective Packaging Foam – 560x495x650mm – 2 pcs needed in each flightcase (Code 0512K146.1)
• Soft Frost filter kit (Code 02SK0410)
• Medium Frost filter kit (Code 02SK0428)
• Heavy Frost filter kit (Code 02SK0430)
• Aliscaf clamp for tube diameter 48-51 mm (Max load 200 Kg) (code 0521A033) (indicated for any kind of loads vertical / horizontal)
• Professional Quick trigger clamp (Max load 100 Kg) (code 0521A037) (not indicated for horizontal load)
• DTS Dongle firmware uploader (code 03.LA.206)

6- IMPORTANT SAFETY INFORMATION

6.1 Fire prevention:

-It is permissible to place the unit on normally flammable surfaces.
Suitable for mounting on normally flammable materials surfaces greater than 200°C with some combustion time lag.
-Minimum distance from the objects and the people lit by the light beam: 0,5 m. 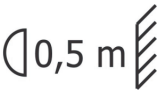

-Replace any blown or damaged fuses only with those of identical value (T 8A 250V). Refer to the wiring diagrams if there is any doubt.
-Connect the projector to mains power via a thermal magnetic circuit breaker.

6.2 Prevention of electric shock:

-High voltage is present inside the unit.
Unplug the unit prior to performing any function which involves touching the inside of the moving head.
-The level of technology inherent in the SYNERGY 5 SPOT requires the assistance of specialised personnel for all servicing. Please refer to an authorised DTS service centre.
-A good earth connection is essential for proper functioning of the projector.
-Never connect the unit without proper earth connection.
-The fixture should be located in places with a good air ventilation.

6.3 Safety:

-Risk Group 2 product according to EN 62471. Risk Group 2
CAUTION. Do not look directly into the light output and do not view the light beam with optical instruments or any device that may concentrate the beam.
May be harmful to the eyes and skin.

-Do not stare at the operating light source.
-The light source contained in this luminaire shall only be replaced by the manufacturer or his service agent or a similar qualified person.
-The unit is not for household use and must be installed by a qualified electrician or experienced person.
-The projector should always be installed with bolts, clamps and other tools that are capable of supporting the weight of the unit.
-Always use a safety cable to sustain the weight of the unit in case of the failure of the main fixing point.
-The external surface of the unit, at various points, may exceed 50°C. Never handle the unit until at least 5 minutes have elapsed since the unit was turned off.
-Never install the fixture in an enclosed area lacking sufficient air flow.

The ambient temperature should not exceed 40°C. t_a 40°C

6.4 Level of protection against the penetration of solid and liquid objects:

-The projector is classified as an ordinary appliance and its protection level against the penetration of solid and liquid objects is IP20.

Suitable for indoor use only.

6.5 Waste Electrical and Electronic Equipment (WEEE) directive:

- The projector, accessories and packaging should be sorted for environmental-friendly recycling.
For EC countries: according to the European Directive 2012/19/EU for Waste Electrical and Electronic Equipment and its implementation into national right, luminaires that are no longer usable must be collected separately and disposed of in an environmentally correct manner.

6.6 Long-life auto-charging buffer battery:

LiFePO4

-The projector contains a rechargeable lead-acid or lithium iron tetraphosphate battery. To preserve the environment, please dispose the battery at the end of its life according to the regulation in force.

7- PAN / TILT LOCK

When moving or servicing the unit you can apply the Pan and Tilt lock.
To lock or release the Pan and Tilt refer to the picture below.

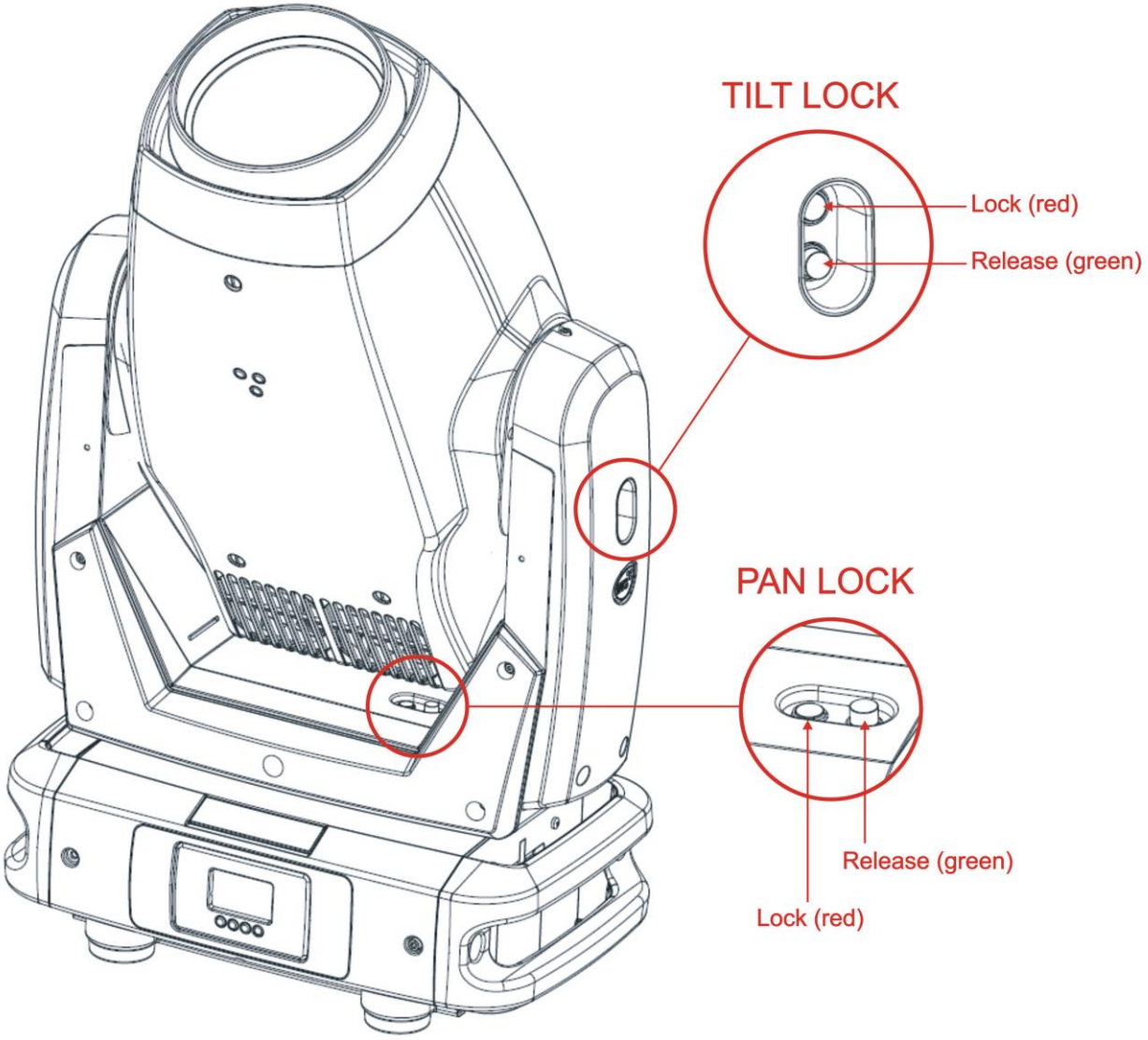

8- VOLTAGE AND FREQUENCY

SYNERGY 5 SPOT operates at 100-240Vac 50-60 Hz.

9- INSTALLATION

The unit is suitable for dry locations only.

SYNERGY 5 SPOT may be either floor or ceiling mounted.

For floor mounting installations, SYNERGY 5 SPOT is supplied with four rubber mounting feet on the base.

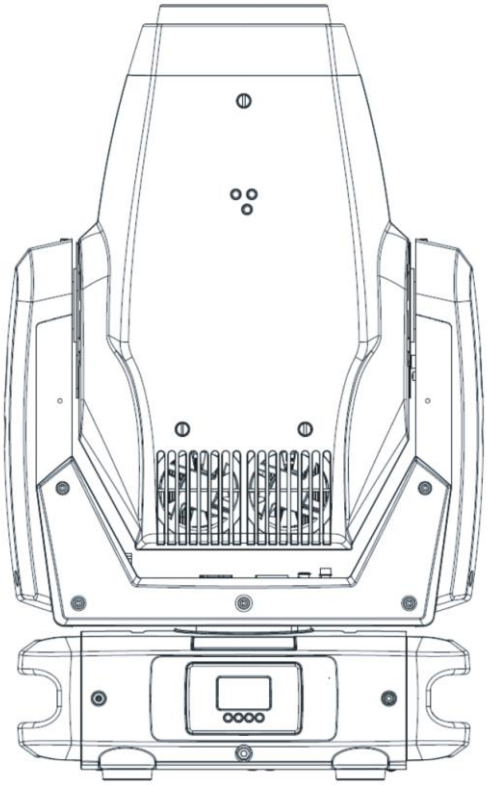

For ceiling mounted installations, we recommend the use of appropriate clamps to fix the unit to the mounting surface.

The supporting structure from which the unit is hung should be capable of bearing the weight of the unit, as should any clamps used to hang it.
The structure should also be sufficiently rigid so as not to move or shake whilst the SYNERGY 5 SPOT is moving.

Four 1/4 turn Fast Locks connections placed in the base of the unit allow to hang the SYNERGY 5 SPOT by using two Omega brackets (provided in the box) in conjunction with Aliscaf clamp (available on demand).

9.1- Safety cable

A safety cable must be securely fixed to the SYNERGY 5 SPOT and to the suspension truss in order to avoid the fixture accidentally falling should the main fixing point fail.
Make sure that the safety cable or chain can bear the weight of the entire unit.
A suitable safety cable is available on demand.
You may attach the safety cable to the attachment point (A) located on the base of the fixture, as shown in the picture below.

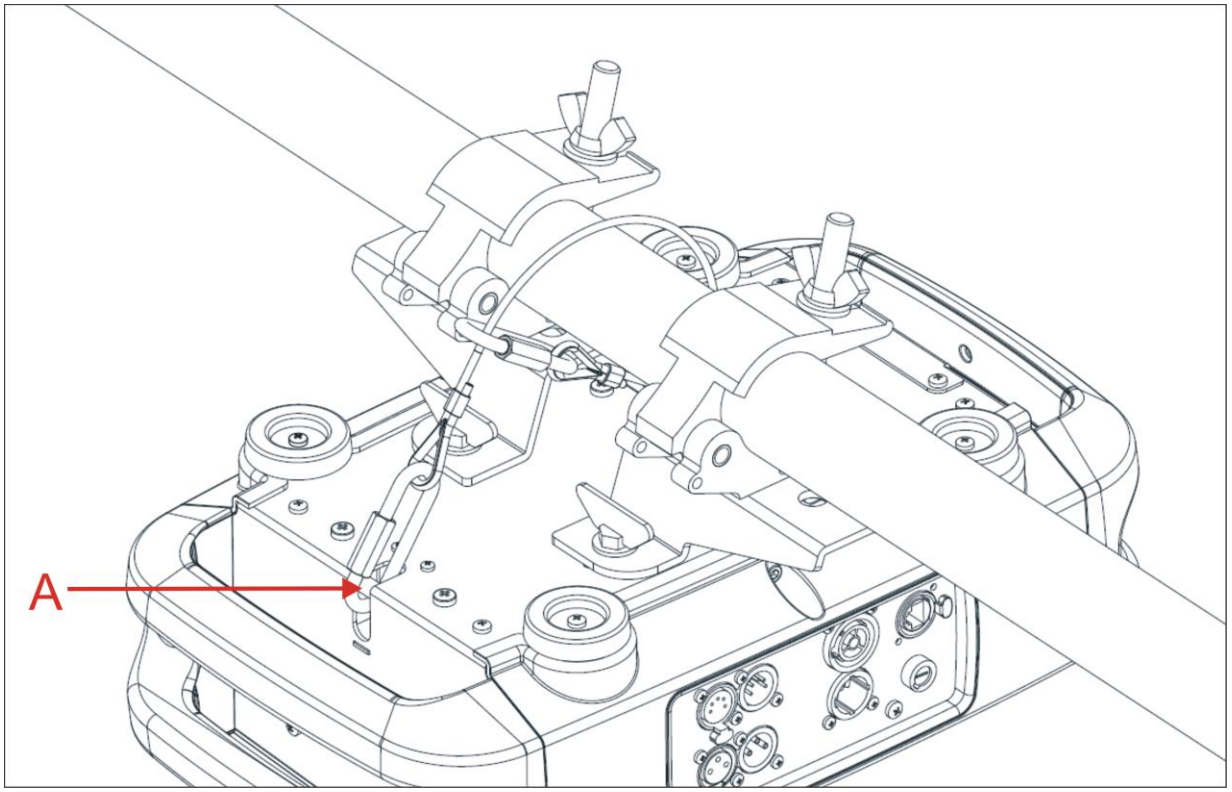

9.2 Protection against liquids

The projector contains electric and electronic components which should under no circumstances come into contact with oil, water or any other liquid.
The proper unit functioning would be compromised should this occur.

9.3- Movement

Pan: 540° rotation ; Tilt: 240° rotation.
Do not place any object in the path of the projector's movement.

9.4- Risk of fire

Each fixture produces heat and must be installed in a well-ventilated place.

It is permissible to place the unit on normally flammable surfaces.
Suitable for mounting on normally flammable materials surfaces greater than 200°C with some combustion time lag.
Minimum distance from the objects and the people lit by the light beam: 0,5 m. 0,5 m

9.5- Forced ventilation

You will note, on inspection, that the unit features various air inlets and cooling fans located on both the base and head of the fixture.
These should, under no circumstances, be blocked or obstructed whilst the projector is in operation. Doing so could cause the fixture to seriously overheat thereby compromising its proper operation.

9.6- Ambient temperature

The projector should never be installed in places that lack a constant air flow.

The ambient temperature should not exceed 40°C. t_a 40°C

10- MAINS CONNECTION

SYNERGY 5 SPOT operates at 100-240Vac 50-60 Hz.
Prior to connecting the unit to your mains supply, ensure that the model in your possession correctly matches the mains supply available.
For connection purposes, ensure that your plug is capable of supporting 3 amps at 230Vac or 6,5 amps at 100Vac each unit connected.
Strict adherence to regulatory norms is strongly recommended.

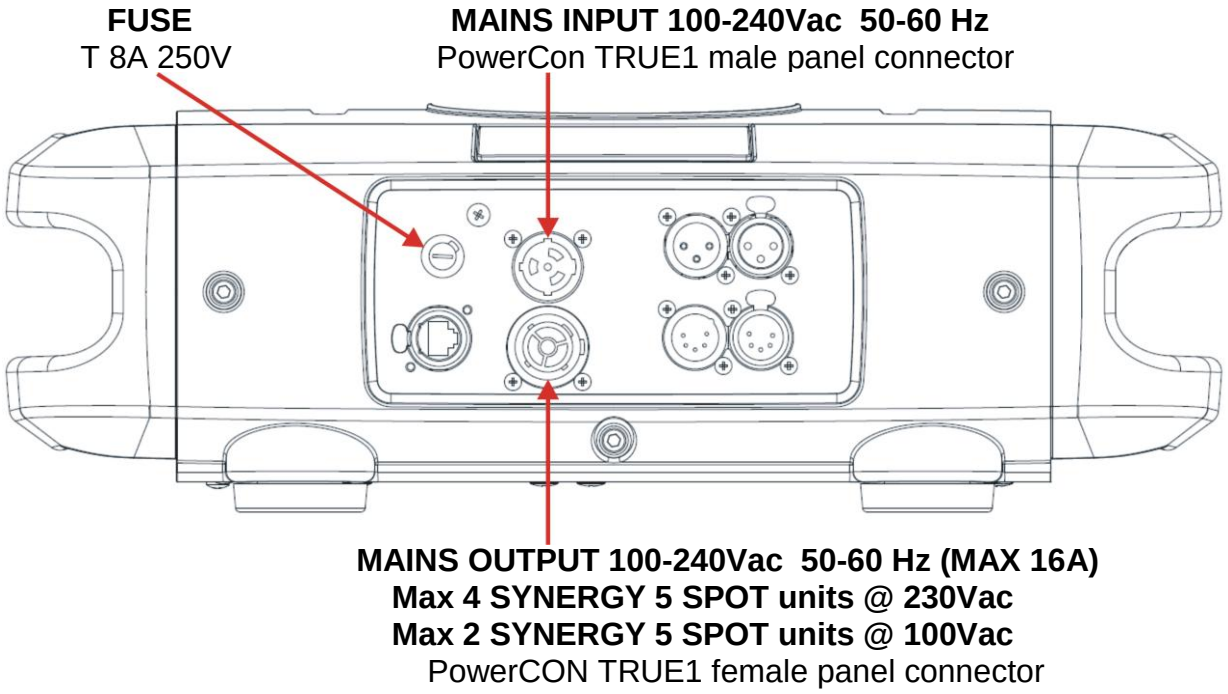

10.1- Protection

The use of a thermal magnetic circuit breaker is recommended for each SYNERGY 5 SPOT.
A good earth connection is essential for the correct operation of the projector.

11- DMX SIGNAL CONNECTION

The unit operates using the digital DMX 512 signal.
Connection between the mixer and the projector or between projectors must be carried out using a two pair screened ø 0.5 mm cable and a XLR 5 or 3 pins connector.
Ensure that the conductors do not touch each other.
Do not connect the cable ground to the XLR chassy.
The plug housing must be isolated. Connect the mixer signal to the DMX IN projector plug and connect it to the next projector by connecting the DMX OUT plug on the first projector to the DMX IN plug of the second one.
This way, all the projectors are cascade connected.
NB. If the display showing the DMX address flashes, then one of the following errors has occurred:

- DMX signal not present
- DMX address not valid
- DMX reception problem

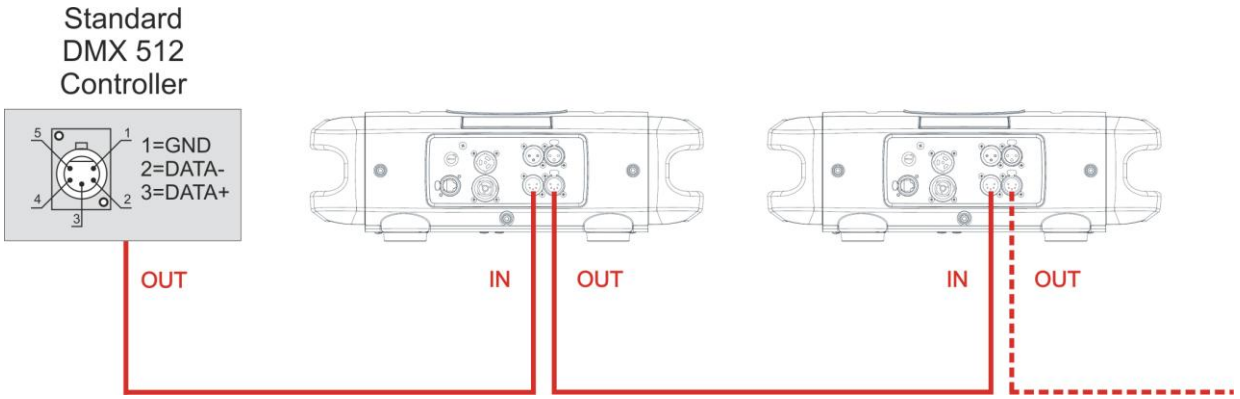

For Installations where long distance DMX cable connections are needed, we suggest to use a DMX terminator.
The DMX terminator is a male XLR 3-5 pins connector with a 120 ohm resistor between pin 2 and 3.
The DMX terminator must be plugged into the last unit (DMX out panel connector) of the DMX line.

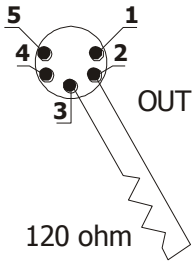

PLACE A 120 OHM RESISTOR BETWEEN PIN 2 AND 3 OF A MALE XRL CONNECTOR AND PLUG IT INTO THE DMX OUT PANEL CONNECTOR OF THE LAST UNIT CONNECTED TO THE DMX LINE

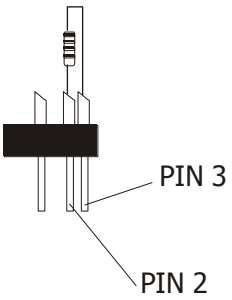

11.1-DMX Addresses

SYNERGY 5 SPOT can be controlled with 37 DMX channels.
In order to use the unit in 37 DMX channels mode, set the following addresses on the mixer:

Projector 1	A001	
Projector 2	A038	If you want to select the next projector, just add “37”
Projector 3	A075	
…..	A….	
projector 6	A186	

11.2-Selecting the DMX address

1) Press the UP-DOWN key until you reach the required DMX channel. The numbers on the display will start to flash (but the new DMX address hasn't yet been set).
2) Press ENTER to confirm your selection. The numbers on the display will stop flashing and the projector is now setted to the new DMX address.

TRICKS:
If you keep pushed the UP or DOWN keys, the channels are calculated more quickly and you get a faster selection.

12- Art-Net / sACN SIGNAL CONNECTION

The unit operates using the Art-Net / sACN signal (sACN not yet implemented). Connection between the mixer and the projector must be carried out using a category 5 network cable and a standard RJ45 connector.

12.1-Direct Ethernet operation

For direct Ethernet operation connect the mixer Art-Net / sACN signal via Ethernet switch to each unit etherCON RJ45 input connector.

For each unit scroll till NETWORK menu (refer to DISPLAY FUNCTIONS for details):

- Select under INPUT menu “Art-Net” or “sACN” as input control signal.
- Select under IP ADDRESS MODE menu “Default”, “Static” or “DHCP” mode.
- Select ETH TO DMX menu to OFF.
- Set the IP address and Net Mask. **IP address must be different for each unit on a network**.
- Set the Art-Net or sACN Universe.

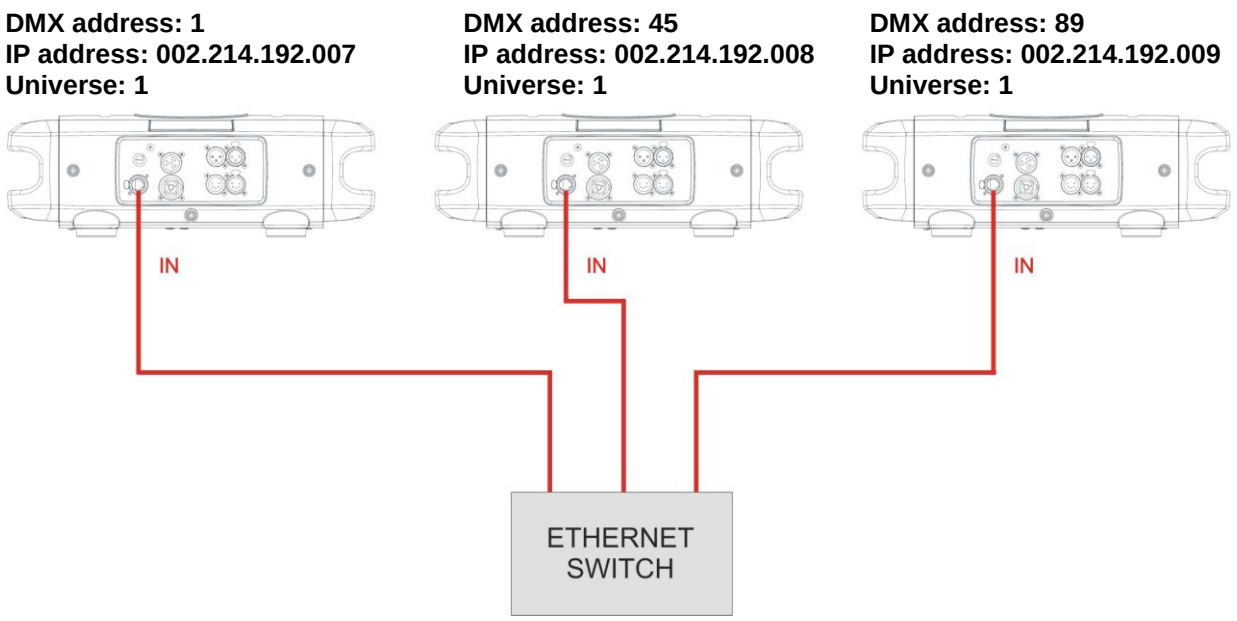

12.2-Ethernet to DMX operation (not yet implemented)
For Ethernet to DMX operation connect the mixer Art-Net / sACN signal via Ethernet switch to the etherCON RJ45 input connector of the first unit only (sACN not yet implemented).
In this configuration the first unit works as an Ethernet to DMX converter and sends DMX signal to its DMX output connector.
All the other units must be connected as a DMX chain with standard DMX settings.

Only for the first unit scroll till NETWORK menu (refer to DISPLAY FUNCTIONS for details):

- Select under INPUT menu “Art-Net” or “sACN” as input control signal.
- Select under IP ADDRESS MODE menu “Default”, “Static” or “DHCP” mode.
- Select ETH TO DMX menu to ON.
- Set the IP address and Net Mask. **IP address must be different for each unit on a network.**
- Set the Art-Net or sACN Universe.

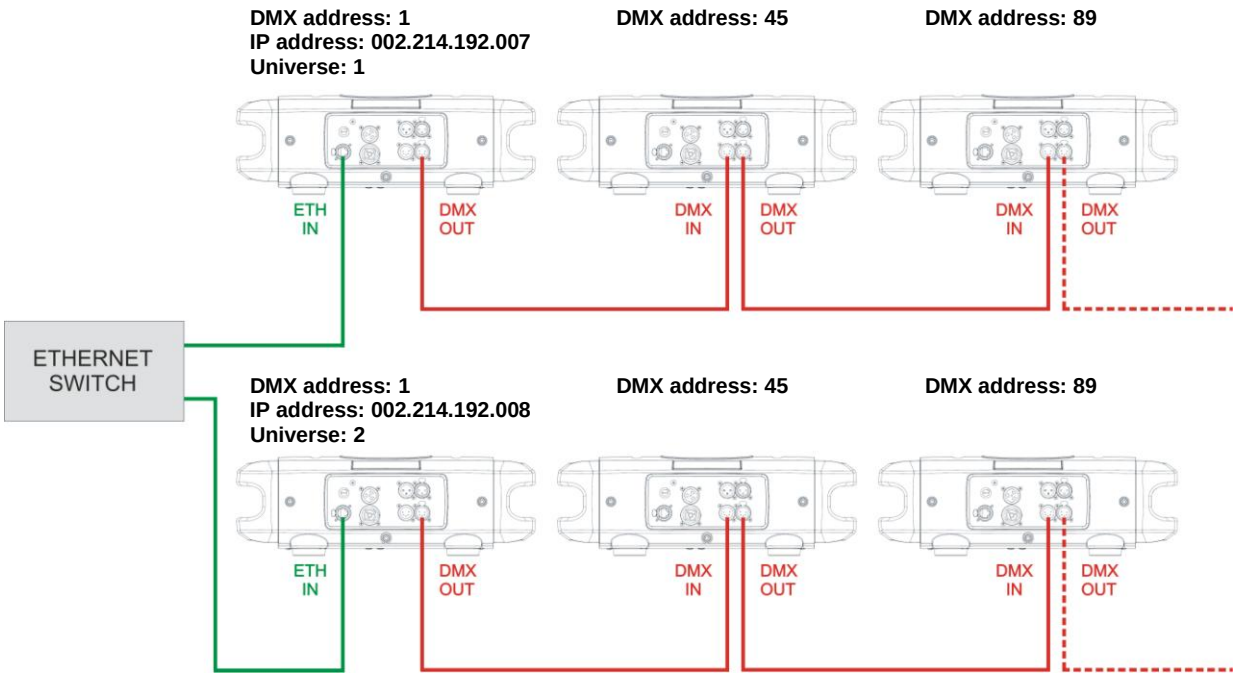

For Installations where long distance DMX cable connections are needed, we suggest to use a DMX terminator.
The DMX terminator is a male XLR 3-5 pins connector with a 120 ohm resistor between pin 2 and 3.
The DMX terminator must be plugged into the last unit (DMX out panel connector) of the DMX line.

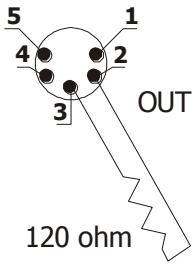

PLACE A 120 OHM RESISTOR BETWEEN PIN 2 AND 3 OF A MALE XRL CONNECTOR AND PLUG IT INTO THE DMX OUT PANEL CONNECTOR OF THE LAST UNIT CONNECTED TO THE DMX LINE

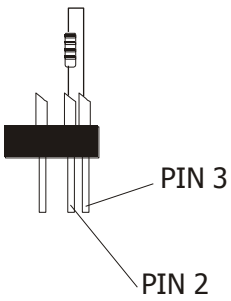

13- RDM FUNCTIONS

By using a RDM controller it is possible to read / set DMX address, DMX mode and other parameters.
SYNERGY 5 SPOT accepts the following RDM commands:

SUPPORTED_PARAMETERS	List of all supported parameters
DEVICE_INFO	To read the following info: • RDM ID • Fixture type • Software version • DMX address • DMX mode • DMX channels • Total sensors
DEVICE_MODEL_DESCRIPTION	Fixture model
MANUFACTURER_LABEL	Manufacturer
SOFTWARE_VERSION_LABEL	Motors and LED Driver software version
DMX_PERSONALITY	To read / set the DMX mode
DMX_PERSONALITY_DESCRIPTION	Description / details of the DMX mode
DMX_START_ADDRESS	To read / set the DMX address
SENSOR_DEFINITION	List of sensors: **1: LED MODULE** LED temperature (°C). **2: LED DRIVER #1** White 1 and White 2 outputs of LED Driver board temperature (°C). **3: LED DRIVER #2** White 3 and White 4 outputs of LED Driver board temperature (°C). **4: MICRO** Micro controller temperature (°C). **5: DC SUPPLY** Power supply output voltage (48Vdc).
SENSOR_VALUE	To read / refresh the value of each sensor
DEVICE_HOURS	Fixture life time
LAMP_HOURS	LED life time
IDENTIFY_DEVICE	LED ON at max power to identify the fixture

14- FIRMWARE UPDATING

To update the firmware release of the SYNERGY 5 SPOT you need:
- DTS Dongle Firmware Uploader (code 03.LA.206).
- “DTS Firmware Upgrade Utility v.2.02” program installed on PC.
- Latest firmware release available for SYNERGY 5 SPOT unit.

Updating the firmware release.
Please follow the procedure below to perform the update:
1. Connect the DTS Dongle Firmware Uploader to a spare USB port on the PC.
2. Connect the unit DMX input to the DTS Dongle Firmware Uploader DMX output with a standard DMX cable and turn ON the unit.
3. Send the new firmware release into the unit by using “DTS Firmware Upgrade Utility v.2.02” program. At the end of the procedure, the unit will reset.

For more information please refer to an authorised DTS service centre.

15- DISPLAY FUNCTIONS

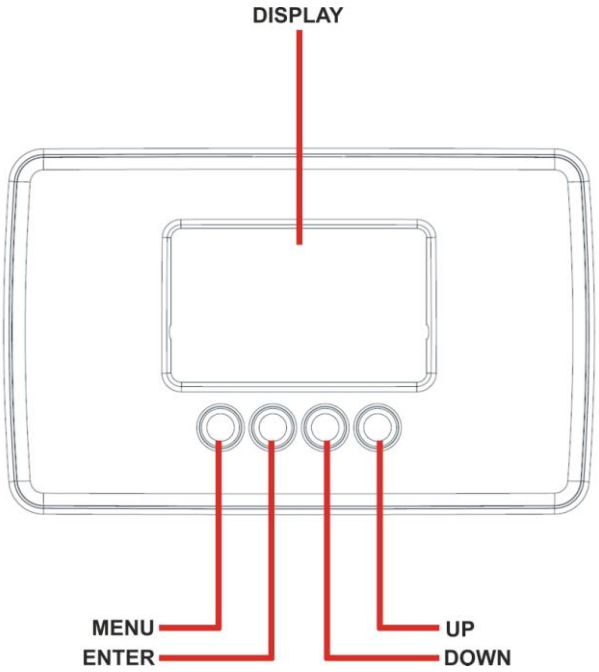

The SYNERGY 5 SPOT display panel shows all the available functions. Using these functions, it is possible to change some of the parameters and add some functions. Changing the DTS setting can vary the functions of the unit so that it does not respond to the DMX 512 used to control it. Carefully follow the instructions below before carrying out any variations or selections.
NOTE: the symbol ☞ shows which key has to be pushed to obtain the desired function.

MOTORS FIRMWARE RELEASE	**10**
RDM Device Model ID	**0x0014**
DMX Personality IDs	**0x01 “37 CHANNELS”**

15- DISPLAY FUNCTIONS

Menu Up-Down Network ENTER Up-Down

NETWORK

INPUT
This menu allows to select the input control signal protocol.
DMX 512 (Default), Art-Net or sACN protocol.
(sACN not yet implemented)

IP ADDRESS MODE
This menu allows to select the mode to set the IP address and the Net Mask.
STATIC = Manual setting of IP address and Net Mask.
DEFAULT = Fixed IP address with manual setting of first byte only and fixed Net Mask (Default).
DHCP = Automatic setting of IP address and Net Mask.

PRIORITY
This menu allows to set the priority between input control signals when the unit is connected via DMX and via ETHERNET at the same time.
DMX 512 = DMX signal has the priority on the Art-Net / sACN signal (Default).
ETHERNET = Art-Net / sACN signal has the priority on the DMX signal.

ETHERNET TO DMX
This menu allows to enable ETHERNET to DMX operation.
ON = In this configuration the first unit works as an Ethernet to DMX converter and sends DMX signal to its DMX output connector.
OFF = Default.
(NOT YET IMPLEMENTED)

STATIC IP
This menu allows to manually set all Bytes of IP address and Net Mask.
IP address must be different for each unit on a network.

DEFAULT IP
Fixed IP address and Net Mask.
It is possible to set only first byte of the IP address.
IP address must be different for each unit on a network.

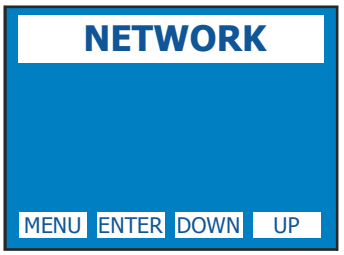

ENTER

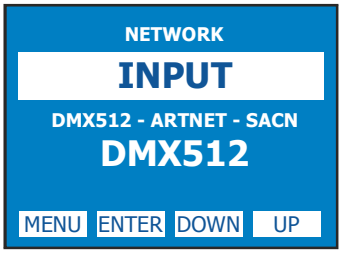

ENTER

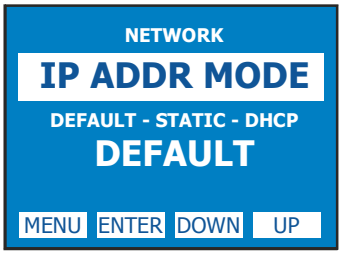

ENTER

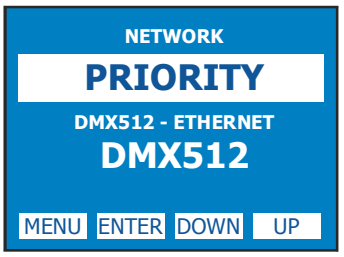

ENTER

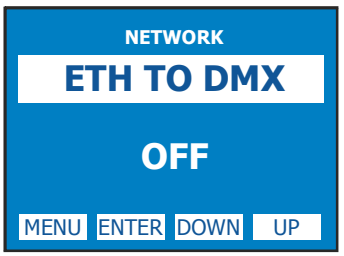

ENTER

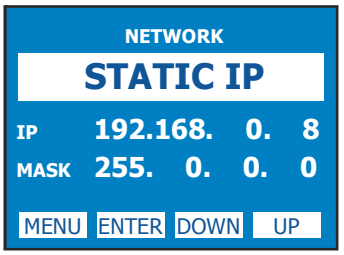

ENTER

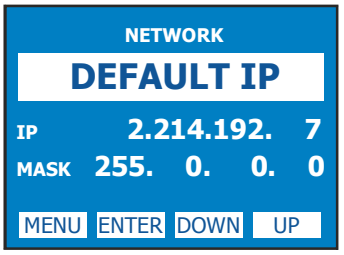

ENTER

15- DISPLAY FUNCTIONS

Menu Up-Down Network ENTER Up-Down

NETWORK

ARTNET UNIVERSE
This menu allows to set the Art-Net Universe (range 0 ÷ 32767).

SACN UNIVERSE
This menu allows to set the sACN Universe (range 1 ÷ 63999).
(sACN not yet implemented)

NETWORK
ARTNET UNIV.
00000 TO 32767
00000
MENU ENTER DOWN UP

ENTER

NETWORK
SACN UNIVERSE
00001 TO 63999
00001
MENU ENTER DOWN UP

ENTER

Menu Up-Down Pan Direction ENTER Up-Down

PAN DIRECTION
This menu allows to set the Pan movement Normal or Reverse

PAN DIRECTION
NORMAL
MENU ENTER DOWN UP

Pan movement
Normal or Reverse
Default = Normal

ENTER

Menu Up-Down Tilt Direction ENTER Up-Down

TILT DIRECTION
This menu allows to set the Tilt movement Normal or Reverse

TILT DIRECTION
NORMAL
MENU ENTER DOWN UP

Tilt movement
Normal or Reverse
Default = Normal

ENTER

15- DISPLAY FUNCTIONS

Menu Up-Down Speed ENTER Up-Down

PAN SPEED
Pan Speed control (1-4)

SPEED
PAN
2
MENU ENTER DOWN UP

Pan Speed control (1-4)
Default = 2
ENTER

TILT SPEED
Tilt Speed control (1-4)

SPEED
TILT
2
MENU ENTER DOWN UP

Tilt Speed control (1-4)
Default = 2
ENTER

ZOOM SPEED
Zoom Speed control (1-4)

SPEED
ZOOM
4
MENU ENTER DOWN UP

Zoom Speed control (1-4)
Default = 4
ENTER

CMY SPEED
CMY Speed control (1-4)
WARNING! Speed value must not be set while CMY filters are moving during programming.

SPEED
CMY
4
MENU ENTER DOWN UP

CMY Speed control
(1-4)
Default = 1
ENTER

15- DISPLAY FUNCTIONS

Menu Up-Down Display ENTER Up-Down

DISPLAY FLIP / STAND BY / CONTRAST

Display Flip:
Reverses display's reading depending on the mounting position
(Automatic, on the ground or suspended).

Display Standby:
To turn off the display (after 5 seconds) or leave it always on.

Display Contrast:
Display contrast regulation (20-35)

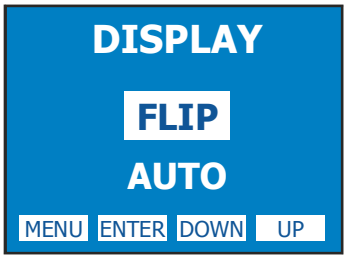

Display Flip
AUTO (Default)
ON THE GROUND
SUSPENDED

ENTER

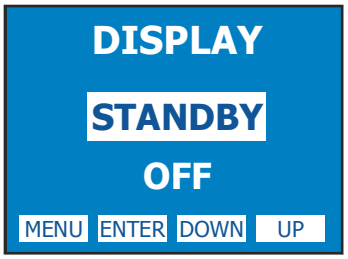

Display Standby
OFF = Display Standby disabled (Default)
ON = Display goes OFF after 5 seconds

ENTER

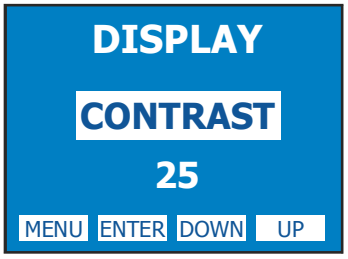

Display Contrast
20-35 (Default = 25)

ENTER

Menu Up-Down DMX Mode ENTER Up-Down

DMX MODE
To select DMX mode:
37 channels

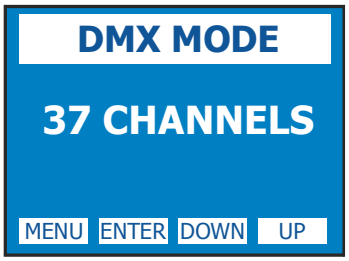

DMX Mode
37 channels

ENTER

15- DISPLAY FUNCTIONS

Menu Up-Down No DMX Action ENTER Up-Down

NO DMX ACTION
This menu allows to set the desired unit's behavior in case DMX signal is missing or not available.

KEEP LAST DMX
Keep last valid DMX signal.

PROGRAM
48 pre-programmed steps.
Speed time values (range 0.5x - 3x) selectable by user (default 1x).

SINGLE CUE
Fixed cue with values selectable by user.

BLACK OUT
Black-out

ENTER

ENTER

ENTER

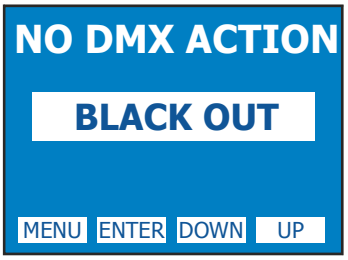

ENTER

Menu Up-Down Reset ENTER Up-Down

RESET
Reset via DMX ENABLED / DISABLED and unit motors reset

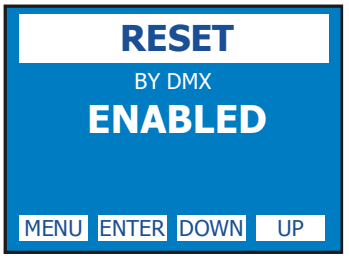

ENABLED = Reset via DMX enabled (Default)
DISABLED = Reset via DMX disabled
NOW = Instant unit motors reset

ENTER

Menu Up-Down Fans ENTER Up-Down

FANS SETTING
SILENT (Default), STANDARD or AUTOMATIC mode

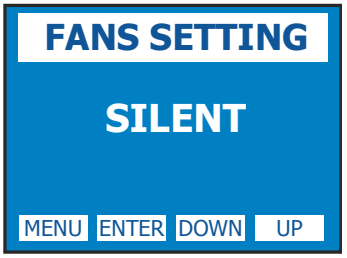

SILENT mode = Low fans speed for a very low noise operation. The LED may be dimmed in particular working conditions (Default).
STANDARD mode = High fans speed: The LED always works at maximum power.
AUTOMATIC mode = Automatic fans speed related to LED working conditions.

ENTER

15- DISPLAY FUNCTIONS

Menu Up-Down Gobo Rotation ENTER Up-Down

GOBO ROTATION
Gobo rotation during gobo scrolling for rotating gobo wheel

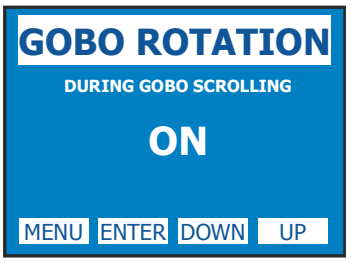

ON = Default
OFF

ENTER

Menu Up-Down LED ENTER Up-Down

LED

SMOOTH
This menu allows to select the value of delay (in milliseconds) for DIMMER channel reaction to DMX dimming command.
0 = Instant response
4 = 100 ms smooth response (Default)
20 = 500 ms smooth response

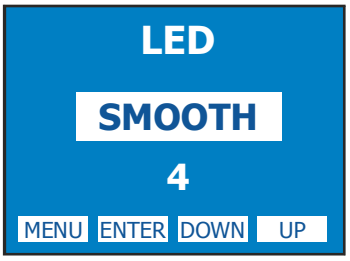

ENTER

GAMMA CORRECTION
This menu allows to select between Linear current output or Quadratic current output for LED.
LINEAR = Linear current output
QUADRATIC = Linear light output (Default)

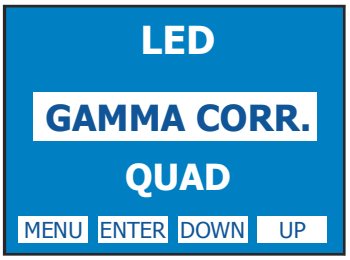

ENTER

OUTPUT FREQUENCY
This menu allows to adjust the PWM Frequency value (Hz) in order to reduce flickering in the process of your camera recordings.
Range = 610 Hz – 20 KHz
Default = 610 Hz

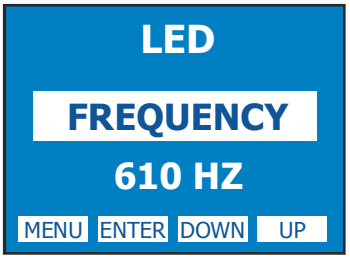

ENTER

15- DISPLAY FUNCTIONS

Menu Up-Down System Info ENTER Up-Down

SYSTEM INFO

SOFTWARE
Unit model; Software release date; Motors boards and LED Driver board software version.

TEMPERATURES
LED temperature monitoring.
DRV-1 = White1 and White 2 outputs of LED Driver board temperature monitoring.
DRV-2 = White 3 and White 4 outputs of LED Driver board temperature monitoring.
MICRO = Micro controller temperature monitoring.

TIME COUNTERS
Unit, LED module and LED Driver board life time.

ADDRESSES
RDM and MAC IDs.

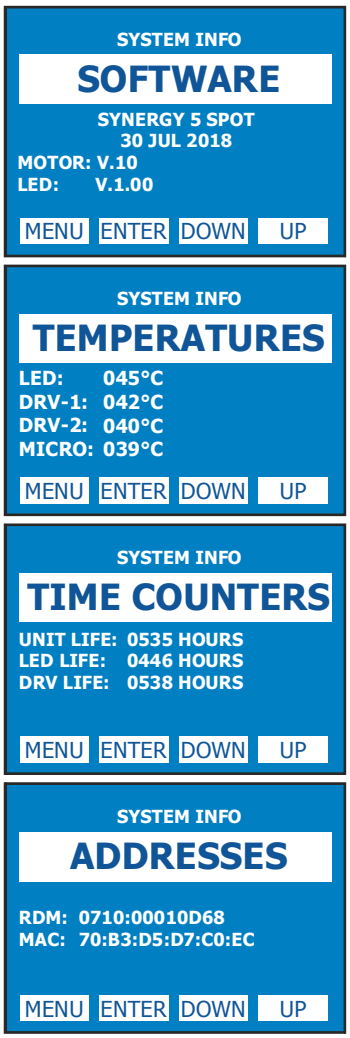

ENTER

ENTER

15- DISPLAY FUNCTIONS

Menu Up-Down Reserved ENTER Up-Down

RESERVED
(Enter code = 100)

Pan lock-Tilt lock

Pan free-Tilt free

Lock Detector

Reboot

Exit To Main

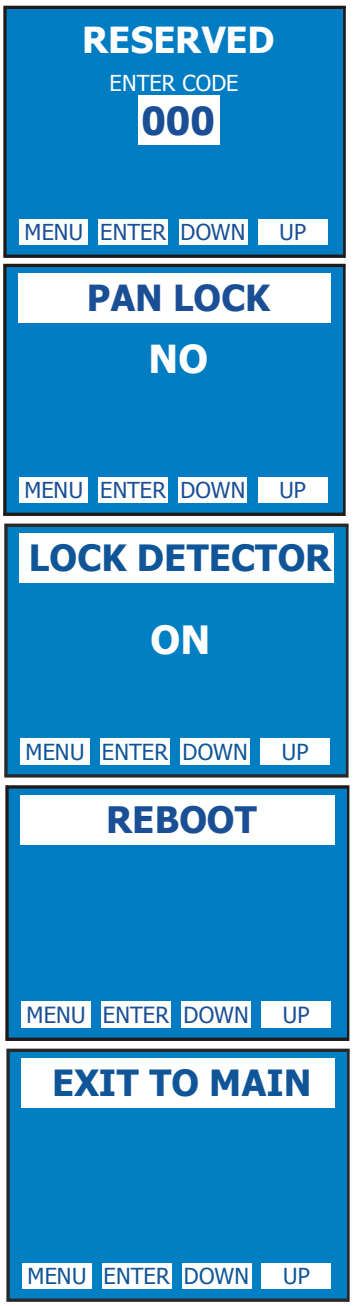

ENTER

Pan Lock = Lock the Pan to the desired value

Tilt Lock = Lock the Tilt to the desired value

Pan Free = Remove power to Pan motor

Tilt Free = Remove power to Tilt motor

Lock Detector OFF
Lock Detector ON (Default):
This function lets the user to activate the Lock detector on Pan and Tilt.
When Lock detector is set to ON, the unit start the Pan&Tilt motors reset normally, but if for any reason there is something blocking the movement for Pan&Tilt motors during the initial reset (example unit into the flight case and power connected), it automatically will stop to reset Pan&Tilt motors after 5 seconds from the startup and a warning message (Pan locked-Tilt locked) will appear on unit display .

Reboot = Unit Reboot without needing of turning OFF the unit

Exit To Main = Exit from Reserved menu

15- DISPLAY FUNCTIONS

Menu Up-Down Default ENTER Up-Down

DEFAULT
To restore factory settings

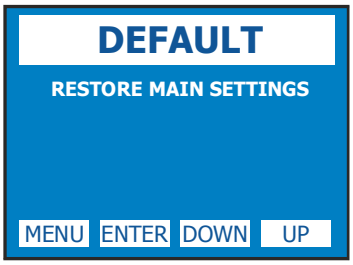

ENTER

Menu Up-Down Manual control ENTER Up-Down

MANUAL CONTROL
Manual mode with functions value selectable by user

RESET
To reset head motors only, Pan and Tilt or all motors

RESTORE DEFAULT
To restore parameters default settings

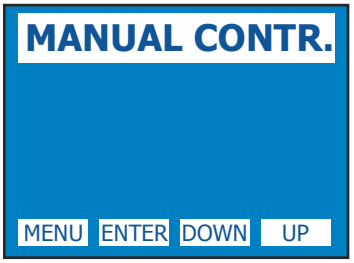

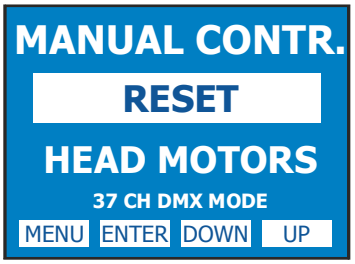

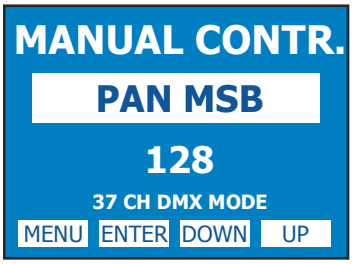

ENTER

16- OPENING THE PROJECTOR HOUSING

It is possible to inspect the inside of the projector by removing the cover as indicated below.

ATTENTION

REMOVE MAINS POWER PRIOR TO ACCESSING THE PROJECTOR'S INTERNAL COMPONENTS.

1) Using a flat bladed screwdriver loose the 3 "¼ turn" screws which fix the head covers on both sides.

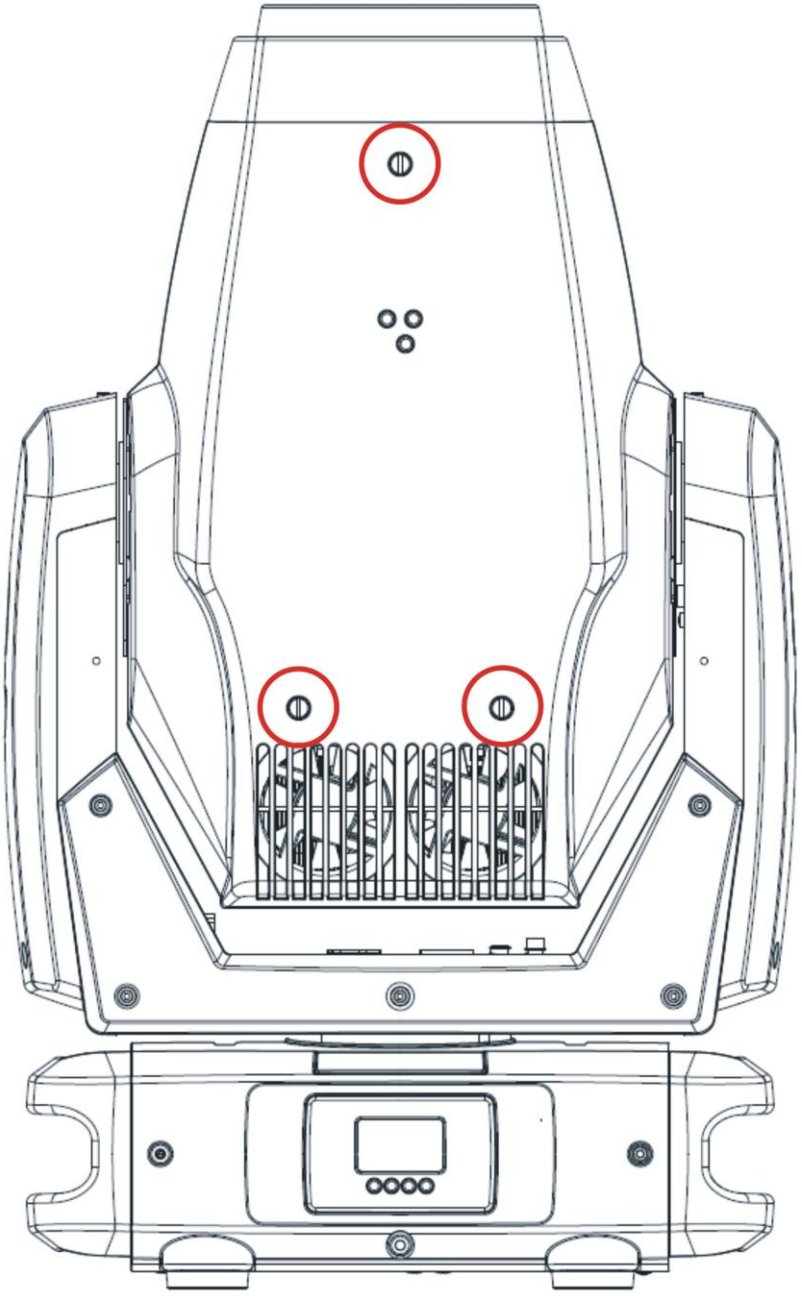

2) Lift each cover, slide the silicone tube down and unhook the safety wire to access the internal head components.

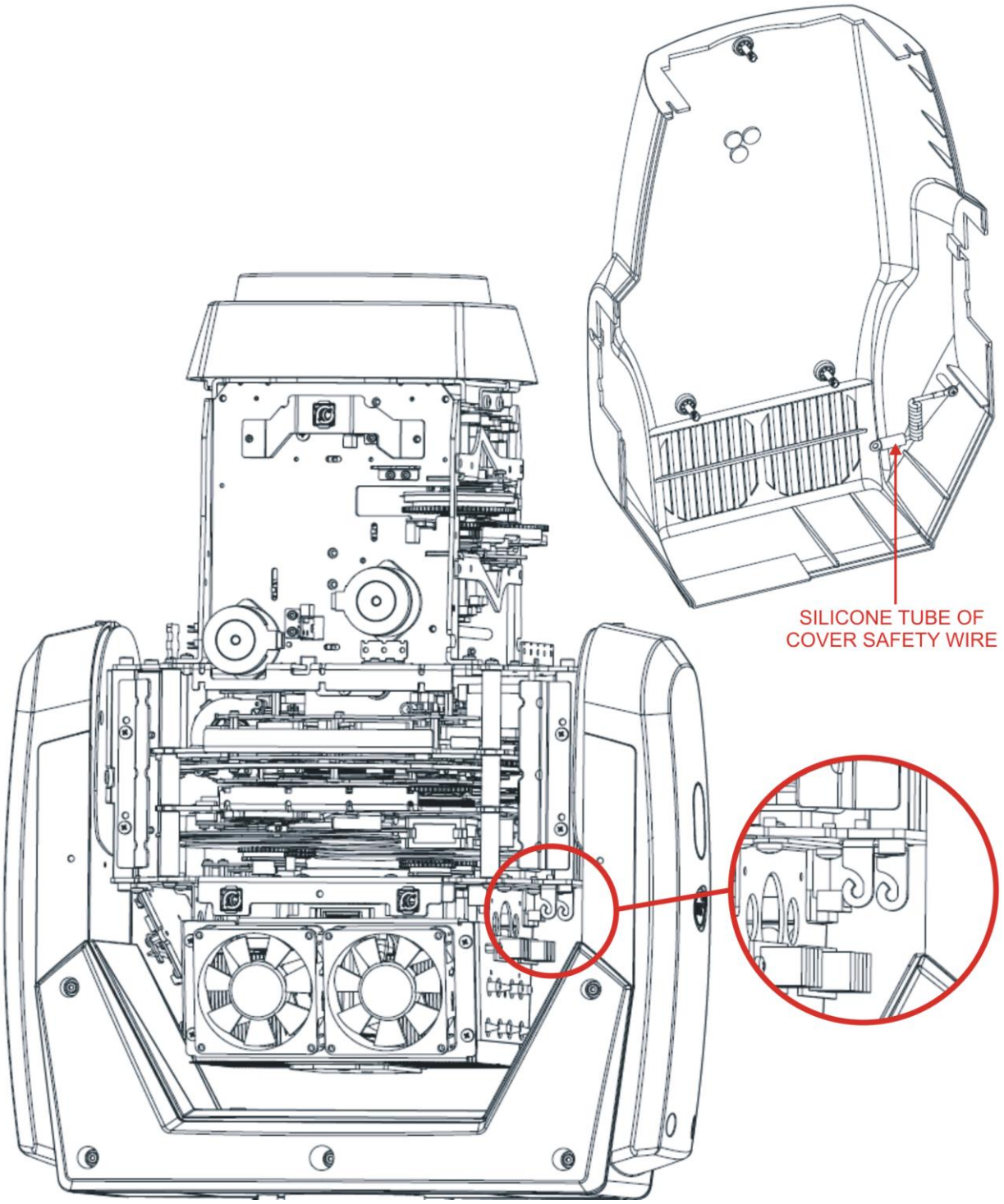

17- REMOVING / REPLACING THE ROTATING GOBOS

SYNERGY 5 SPOT uses a mechanical system which allows the fixture's gobos to be removed without the use of special tools.
When replacing gobos, ensure that the projector is switched off.
Open the projector housing as described on page 31 and pull out the gobo holder from the rotating gobo wheel as shown in the picture below.

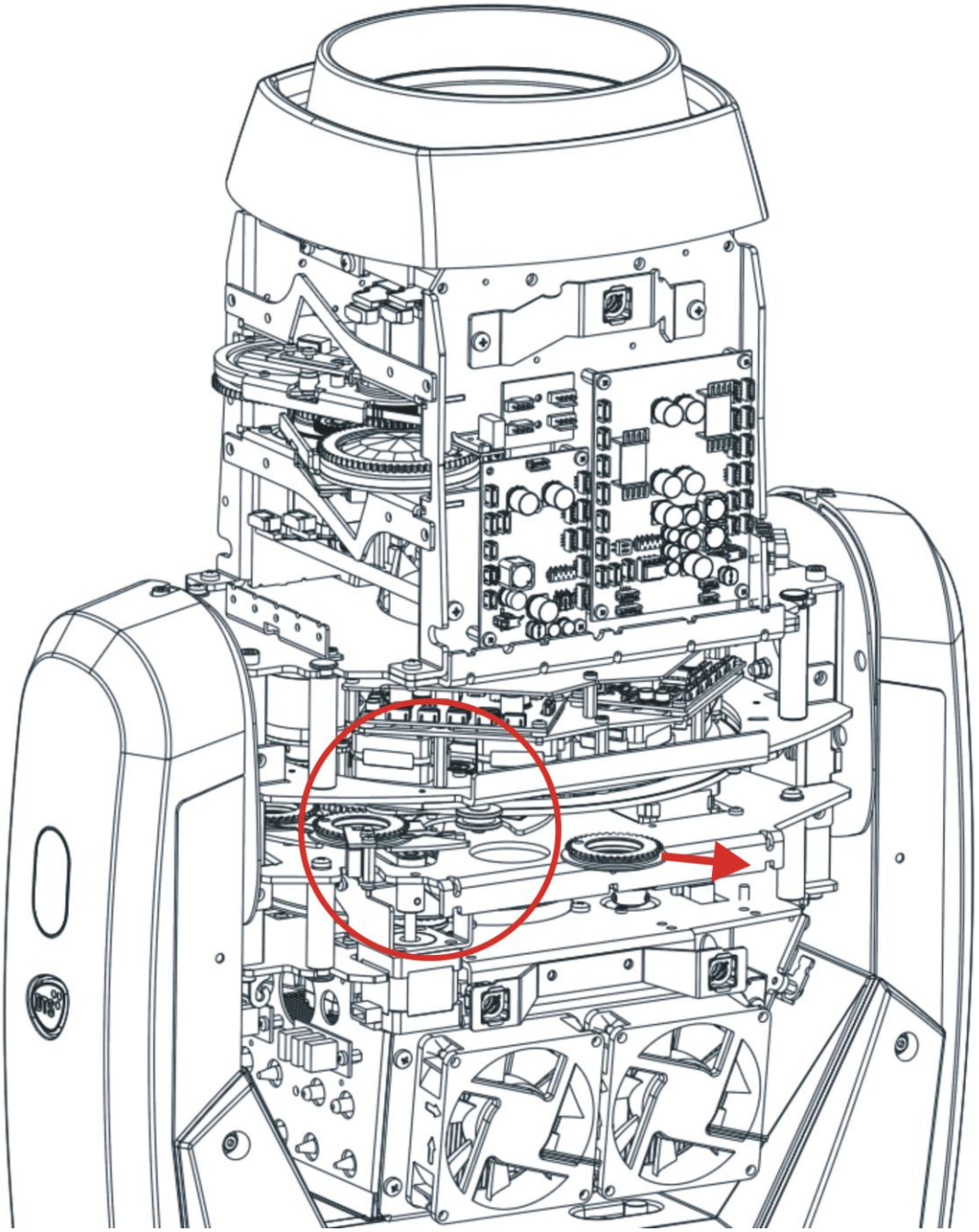

REPLACEMENT GOBOS

Replacement gobos should be made in either dichroic glass or metal.

Gobo dimensions are as follows:

Rotating gobos
ø external (ED) = 27.9 mm + 0 / - 0,1 mm
ø of image (ID) = 21.0 mm
thickness = from 0.2 to 3 mm (see catalogue)

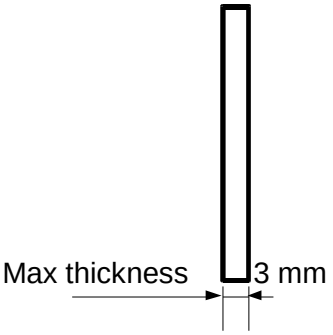

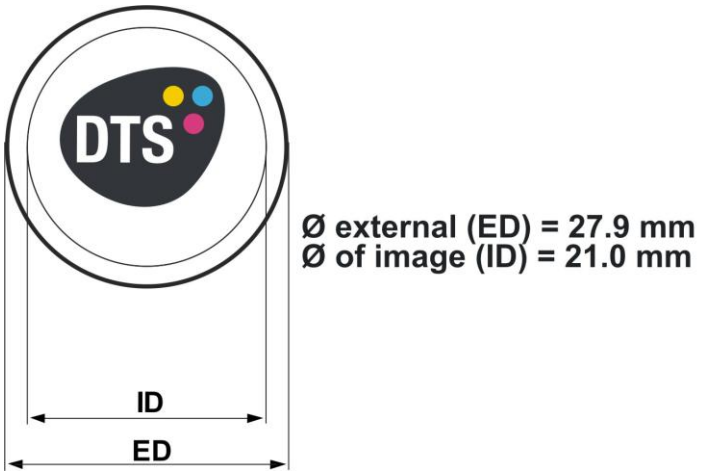

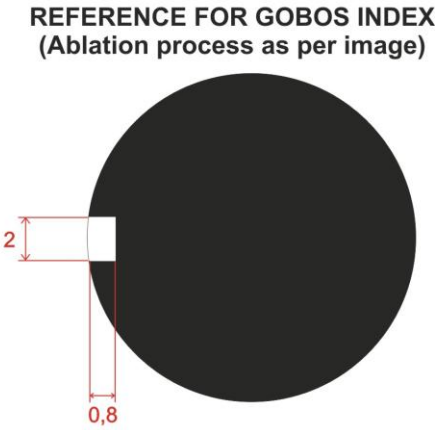

Coated side
When an object is held up the coated side of the glass gobo there is no space between the object and its reflection.

Coated side

Uncoated side
When an object is held up the uncoated side of the glass gobo there is a space between the object and its reflection.

Uncoated side

Load with coated surface toward the light source.

18- PERIODIC CLEANING

18.1- Lenses and reflectors

Even a fine layer of dust can reduce the luminous output substantially.
Regularly clean all lenses and the reflector using a soft cotton cloth, dampened with a specialist lens cleaning solution.

18.2- Fans and air passages

The fans and air passages must be cleaned approximately every 6 weeks.
This periodic cleaning will depend of course, on the conditions in which the projector is operating.
Suitable instruments for performing this type of maintenance are a brush and a common vacuum cleaner or an air compressor.
If necessary, clean the fans and air passages more frequently.

19- PERIODIC CONTROLS

Attention 

Disconnect mains power prior to opening the projector housing.

Mechanical parts

Periodically check all mechanical parts, gears, guides, belts, etc. for wear and tear, replacing them if necessary.
Periodically check the lubrification of all components, particularly the parts subject to high temperatures.
If necessary, lubrificate with suitable lubrificant, available from your DTS distributor.
Check the tension of the belts and adjust it if necessary.

Electrical components

Check all electrical components for correct earthing and proper connection of all connectors, refastening if necessary.

Fuse replacement

Locate the fuse, which protects the lamp and electronics, in the base of SYNERGY 5 SPOT.
Using a multimeter, test the condition of the fuse, replacing it with one of equivalent type (T 8A 250V) if necessary.

20- DMX PROTOCOL

MOTORS FIRMWARE RELEASE	**10**
RDM Device Model ID	**0x0014**
DMX Personality IDs	**0x01 "37 CHANNELS"**

37 CHANNELS MODE

1 PAN msb
2 PAN lsb
3 TILT msb
4 TILT lsb
5 SPEED MOVEMENT
6 *reserved*
7 DIMMER msb
8 DIMMER lsb
9 SHUTTER
10 COLOUR WHEEL
11 COLOUR MODE
12 CYAN
13 MAGENTA
14 YELLOW
15 CTO
16 GEL FILTERS EMULATION
17 GOBO
18 GOBO ROTATION/INDEX msb
19 GOBO ROTATION/INDEX lsb
20 GOBO SHAKE
21 FIXED GOBO
22 FIXED GOBO MODE
23 FIXED GOBO SHAKE
24 DYNAMOVES MACROS (not yet implemented)
25 DYNAMOVE MACROS SPEED
26 PRISM MODE
27 PRISM 1 POSITION
28 PRISM 1 ROTATION/INDEX
29 PRISM 2 POSITION
30 PRISM 2 ROTATION/INDEX
31 FROST
32 AUTOFOCUS
33 FOCUS msb
34 FOCUS lsb
35 ZOOM
36 FIXTURE CONTROL
37 RESET

DMX CHANNEL	1	Parameter: **PAN msb**
DMX CHANNEL	2	Parameter: **PAN lsb**

DMX CHANNEL	3	Parameter: **TILT msb**
DMX CHANNEL	4	Parameter: **TILT lsb**

DMX CHANNEL	5	Parameter: **SPEED MOVEMENT**

DMX value	Function
000-009	Fast movement
010-025	Standard movement
026-127	Vector mode from fast to slow
128-247	Variable time reaction to dmx signal (fast to slow)
248-255	Silent movement

DMX CHANNEL	7	Parameter: **DIMMER msb**
DMX CHANNEL	8	Parameter: **DIMMER lsb**

DMX CHANNEL	9	Parameter: **SHUTTER**

DMX value	Function
000-009	Black Out
010-019	Open
020-029	Black Out
030-119	Strobe (from 3,27s to 30ms)
120-149	Pulse up (from 42,6s to 120ms)
150-179	Pulse down (from 42,6s to 120ms)
180-189	Random strobe
190-199	reserved
200-209	Gobo/Colour wheel in Black Out (not yet implemented)
210-219	Pan/Tilt in Black Out (not yet implemented)
220-222	reserved
223-224	Frost/Prism in Black Out (not yet implemented)
225-226	Zoom in Black Out (not yet implemented)
227-229	Gobo/Colour wheel/Frost/Prism/Zoom in Black Out (not yet implemented)
230-255	Open

DMX CHANNEL	10	Parameter: **COLOUR WHEEL**

FULL COLOUR (if channel 11 "COLOUR MODE" = DMX range value 0-63)

DMX value	Function
000-009	Open
010-049	Colour 1
050-089	Colour 2
090-129	Colour 3
130-169	Colour 4
170-209	Colour 5
210-255	Colour 6

HALF COLOUR (if channel 11 "COLOUR MODE" = DMX range value 64-127)

DMX value	Function
000-009	Open
010-044	Colour 0-1
045-079	Colour 1-2
080-114	Colour 2-3
115-149	Colour 3-4
150-184	Colour 4-5
185-219	Colour 5-6
220-255	Colour 6-0

PROPORTIONAL COLOUR (if channel 11 "COLOUR MODE" = DMX range value 128-191)

DMX value	Function
000-009	Open
010-255	Proportional colour

RAINBOW (if channel 11 "COLOUR MODE" = DMX range value 192-255)

DMX value	Function
000-009	Open
010-127	CW rotation speed from max to min
128-137	Stop
138-255	CCW rotation speed from min to max

DMX CHANNEL	11	Parameter: **COLOUR MODE**

DMX value	Function
000-063	Full colour
064-127	Half colour
128-191	Proportional colour
192-255	Rainbow

DMX CHANNEL	12	Parameter: **CYAN**

DMX value	Function
000-255	Proportional colour

DMX CHANNEL	13	Parameter: **MAGENTA**

DMX value	Function
000-255	Proportional colour

DMX CHANNEL	14	Parameter: **YELLOW**

DMX value	Function
000-255	Proportional colour

DMX CHANNEL	15	Parameter: **CTO**

DMX value	Function
000-255	Linear CTO from min to max

DMX CHANNEL	16	Parameter: **GEL FILTERS EMULATION**

DMX value	Function
000-009	No function
010-020	19 FIRE
021-025	20 MEDIUM AMBER
026-030	25 SUNSET RED
031-035	68 SKY BLUE
036-040	101 YELLOW
041-045	104 DEEP AMBER
046-050	105 ORANGE
051-055	106 PRIMARY RED
056-060	111 DARK PINK
061-065	113 MAGENTA
066-070	117 STEEL BLUE
071-075	118 LIGHT BLUE
076-080	122 FERN GREEN
081-085	126 MAUVE
086-090	132 MEDIUM BLUE
091-095	136 PALE LAVENDER
096-100	137 LAVENDER
101-105	138 PALE GREEN
106-110	139 PRIMARY GREEN
111-115	147 APRICOT
116-120	151 GOLD TINT
121-125	154 PALE ROSE
126-130	156 CHOCOLATE
131-135	181 CONGO BLUE
136-140	200 DOUBLE CT BLUE
141-145	201 FULL CT BLUE
146-150	204 FULL CT ORANGE
151-155	341 PLUM
156-255	reserved

DMX CHANNEL	17	Parameter: **GOBO**

DMX value	Function
000-009	Open
010-042	Gobo 1
043-075	Gobo 2
076-108	Gobo 3
109-141	Gobo 4
142-174	Gobo 5
175-207	Gobo 6
208-213	Speed rotation 1 min
214-219	Speed rotation 2
220-225	Speed rotation 3
226-231	Speed rotation 4
232-237	Speed rotation 5
238-243	Speed rotation 6
244-249	Speed rotation 7
250-255	Speed rotation 8 max

DMX CHANNEL	18	Parameter: **GOBO ROTATION/INDEX msb**
DMX CHANNEL	19	Parameter: **GOBO ROTATION/INDEX lsb**

DMX value	**Function**
MSB.LSB-MSB.LSB INT16-INT16	
000.000-127.255 00000-32767	Proportional index 0°-360°
128.000-180.255 32768-46335	CCW gobo rotation (max to min)
181.000-202.255 46336-51967	Stop
203.000-255.255 51968-65535	CW gobo rotation (min to max)

DMX CHANNEL	20	Parameter: **GOBO SHAKE**

DMX value	**Function**
000-009	Stop
010-019	Gobo shake R-L speed 1
020-029	Gobo shake R-L speed 2
030-039	Gobo shake R-L speed 3
040-049	Gobo shake R-L speed 4
050-059	Gobo shake R-L speed 5
060-069	Gobo shake R-L speed 6
070-079	Gobo shake R-L speed 7
080-089	Gobo shake R-L speed 8
090-099	Gobo shake R-L speed 9
100-109	Gobo shake R-L speed 10
110-126	Gobo shake R-L speed 11
127-138	Stop
139-148	Gobo shake L-R speed 1
149-158	Gobo shake L-R speed 2
159-168	Gobo shake L-R speed 3
169-178	Gobo shake L-R speed 4
179-188	Gobo shake L-R speed 5
189-198	Gobo shake L-R speed 6
199-208	Gobo shake L-R speed 7
209-218	Gobo shake L-R speed 8
219-228	Gobo shake L-R speed 9
229-238	Gobo shake L-R speed 10
239-255	Gobo shake L-R speed 11

DMX CHANNEL	21	Parameter: **FIXED GOBO**

MODE: FULL

DMX value	Function
000-009	Open
010-028	Gobo 1
029-047	Gobo 2
048-066	Gobo 3
067-085	Gobo 4
086-104	Gobo 5
105-123	Gobo 6
124-142	Gobo 7
143-161	Gobo 8
162-180	Gobo 9
181-199	Gobo 10
200-218	Gobo 11
219-237	Gobo 12
238-255	Gobo 13

MODE: HALF

DMX value	Function
000-009	Open
010-027	Gobo 0-1
028-045	Gobo 1-2
046-063	Gobo 2-3
064-081	Gobo 3-4
082-099	Gobo 4-5
100-117	Gobo 5-6
118-135	Gobo 6-7
136-153	Gobo 7-8
154-171	Gobo 8-9
172-189	Gobo 9-10
190-207	Gobo 10-11
208-225	Gobo 11-12
226-243	Gobo 12-13
244-255	Gobo 13-0

MODE: PROPORTIONAL

DMX value	Function
000-009	Open
010-255	Proportional Gobos

MODE: SPIN

DMX value	Function
000-009	Open
010-127	CW rotation speed from max to min
128-137	Stop
138-255	CCW rotation speed from min to max

DMX CHANNEL	22	Parameter: **FIXED GOBO MODE**

DMX value	Function
000-063	Full
064-127	Half
128-191	Proportional
192-255	Spin

DMX CHANNEL	23	Parameter: **FIXED GOBO SHAKE**

DMX value	Function
000-009	Stop
010-126	Gobo shake R-L speed 1
017-023	Gobo shake R-L speed 2
024-030	Gobo shake R-L speed 3
031-037	Gobo shake R-L speed 4
038-044	Gobo shake R-L speed 5
045-051	Gobo shake R-L speed 6
052-058	Gobo shake R-L speed 7
059-065	Gobo shake R-L speed 8
066-072	Gobo shake R-L speed 9
073-079	Gobo shake R-L speed 10
080-086	Gobo shake R-L speed 11
087-093	Gobo shake R-L speed 12
094-100	Gobo shake R-L speed 13
101-107	Gobo shake R-L speed 14
108-114	Gobo shake R-L speed 15
115-126	Gobo shake R-L speed 16
127-138	Stop
139-145	Gobo shake L-R speed 1
146-152	Gobo shake L-R speed 2
153-159	Gobo shake L-R speed 3
160-166	Gobo shake L-R speed 4
167-173	Gobo shake L-R speed 5
174-180	Gobo shake L-R speed 6
181-187	Gobo shake L-R speed 7
188-194	Gobo shake L-R speed 8
195-201	Gobo shake L-R speed 9
202-208	Gobo shake L-R speed 10
209-215	Gobo shake L-R speed 11
216-222	Gobo shake L-R speed 12
223-229	Gobo shake L-R speed 13
230-236	Gobo shake L-R speed 14
237-243	Gobo shake L-R speed 15
244-255	Gobo shake L-R speed 16

DMX CHANNEL	24	Parameter: **DYNAMOVES MACROS** (not yet implemented)

DMX value	Function	DMX value	Function
000-009	No function	058-059	....
010-011	Macro 1	060-061	....
012-013	Macro 2		
014-015	Macro 3		
016-017	Macro 4		
018-019	....		
020-021	....		
022-023	....		
024-025	....		
026-027	....		
028-029	....		
030-031	....		
032-033	....		
034-035	....		
036-037	....		
038-039	....		
040-041	....		
042-043	....		
044-045	....		
046-047	....		
048-049	....		
050-051	....		
052-053	....		
054-055	....		
056-057	....		

DMX CHANNEL	25	Parameter: **DYNAMOVE MACROS SPEED**

DMX value	Function
000-010	1X
011-050	1.1X to 5X (step 0.1X)
051-090	4.9X to 1X (step 0.1X)
091-159	1X
160-169	0.9X
170-179	0.8X
180-189	0.7X
190-199	0.6X
200-209	0.5X
210-219	0.4X
220-229	0.3X
230-239	0.2X
240-255	0.1X

DMX CHANNEL	26	Parameter: **PRISM MODE**

DMX value	Function
000-009	No function
010-049	Prism 1 inserted after zoom lens
050-089	Prism 2 inserted after zoom lens
090-129	Prism 1+2 inserted after zoom lens
130-169	Prism 1 inserted between focus and zoom lenses
170-209	Prism 2 inserted between focus and zoom lenses
210-255	Prism 1+2 inserted between focus and zoom lenses

DMX CHANNEL	27	Parameter: **PRISM 1 POSITION**

DMX value	Function
000-009	Centre
010-127	Outward left to centre
128-137	Centre
138-255	Outward right to centre

DMX CHANNEL	28	Parameter: **PRISM 1 ROTATION/INDEX**

DMX value	Function
000-127	Proportional index 0°-360°
128-180	CW rotation from fast to slow
181-202	Stop
203-255	CCW rotation from slow to fast

DMX CHANNEL	29	Parameter: **PRISM 2 POSITION**

DMX value	Function
000-009	Centre
010-127	Outward left to centre
128-137	Centre
138-255	Outward right to centre

DMX CHANNEL	30	Parameter: **PRISM 2 ROTATION/INDEX**

DMX value	Function
000-127	Proportional index 0°-360°
128-180	CW rotation from fast to slow
181-202	Stop
203-255	CCW rotation from slow to fast

DMX CHANNEL	31	Parameter: **FROST**

DMX value	Function
000-009	No function
010-255	Frost Filter linear from min to max

DMX CHANNEL	32	Parameter: **AUTOFOCUS**

DMX value	Function
000-063	AUTOFOCUS OFF
064-127	reserved
128-191	AUTOFOCUS ON (priority on fixed gobo wheel) (not yet implemented)
192-255	AUTOFOCUS ON (priority on rotating gobo wheel) (not yet implemented)

DMX CHANNEL	33	Parameter: **FOCUS msb**
DMX CHANNEL	34	Parameter: **FOCUS lsb**

DMX value	Function
000-255	Linear focus

DMX CHANNEL	35	Parameter: **ZOOM**

DMX value	Function
000-255	Linear zoom

DMX CHANNEL	36	Parameter: **FIXTURE CONTROL**

DMX value	Function
000-009	0 - No effect
010-024	1 - SMOOTH DIMMING OFF
025-026	2 - SMOOTH DIMMING 1
027-028	3 - SMOOTH DIMMING 2
029-030	4 - SMOOTH DIMMING 3
031-032	5 - SMOOTH DIMMING 4 (DEFAULT)
033-034	6 - SMOOTH DIMMING 5
035-036	7 - SMOOTH DIMMING 6
037-038	8 - SMOOTH DIMMING 7
039-040	9 - SMOOTH DIMMING 8
041-042	10 - SMOOTH DIMMING 9
043-044	11 - SMOOTH DIMMING 10
045-046	12 - SMOOTH DIMMING 11
047-048	13 - SMOOTH DIMMING 12
049-050	14 - SMOOTH DIMMING 13
051-052	15 - SMOOTH DIMMING 14
053-054	16 - SMOOTH DIMMING 15
055-056	17 - SMOOTH DIMMING 16
057-058	18 - SMOOTH DIMMING 17
059-060	19 - SMOOTH DIMMING 18
061-062	20 - SMOOTH DIMMING 19
063-064	21 - SMOOTH DIMMING 20
065-074	22 - GAMMA CORRECTION QUADRATIC (DEFAULT)
075-084	23 - GAMMA CORRECTION LINEAR
085-104	24 - OUTPUT FREQUENCY 610 Hz (DEFAULT)
105	25 - OUTPUT FREQUENCY 800 Hz
106	26 - OUTPUT FREQUENCY 1000 Hz
107	27 - OUTPUT FREQUENCY 1500 Hz
108	28 - OUTPUT FREQUENCY 2000 Hz
109	29 - OUTPUT FREQUENCY 2500 Hz
110	30 - OUTPUT FREQUENCY 3000 Hz
111	31 - OUTPUT FREQUENCY 3500 Hz
112	32 - OUTPUT FREQUENCY 4000 Hz
113	33 - OUTPUT FREQUENCY 4500 Hz
114	34 - OUTPUT FREQUENCY 5000 Hz

115	35 - OUTPUT FREQUENCY 5500 Hz
116	36 - OUTPUT FREQUENCY 6000 Hz
117	37 - OUTPUT FREQUENCY 6500 Hz
118	38 - OUTPUT FREQUENCY 7000 Hz
119	39 - OUTPUT FREQUENCY 7500 Hz
120	40 - OUTPUT FREQUENCY 8000 Hz
121	41 - OUTPUT FREQUENCY 8500 Hz
122	42 - OUTPUT FREQUENCY 9000 Hz
123	43 - OUTPUT FREQUENCY 9500 Hz
124	44 - OUTPUT FREQUENCY 10000 Hz
125	45 - OUTPUT FREQUENCY 11000 Hz
126	46 - OUTPUT FREQUENCY 12000 Hz
127	47 - OUTPUT FREQUENCY 13000 Hz
128	48 - OUTPUT FREQUENCY 14000 Hz
129	49 - OUTPUT FREQUENCY 15000 Hz
130	50 - OUTPUT FREQUENCY 16000 Hz
131	51 - OUTPUT FREQUENCY 17000 Hz
132	52 - OUTPUT FREQUENCY 18000 Hz
133	53 - OUTPUT FREQUENCY 19000 Hz
134	54 - OUTPUT FREQUENCY 20000 Hz
135-136	55 - CMY / CTO SPEED 1
137-138	56 - CMY / CTO SPEED 2
139-140	57 - CMY / CTO SPEED 3
141-142	58 - CMY / CTO SPEED 4(DEFAULT)
143-144	59 - reserved
145-146	60 - reserved
147-148	61 - reserved
149-150	62 - reserved
151-152	63 - reserved
153-154	64 - reserved
155-164	65 - DISPLAY STANDBY DISABLE (DEFAULT)
165-174	66 - DISPLAY STANDBY ENABLE
175-176	67 - NO DMX ACTION - KEEP LAST DMX (DEFAULT)
177-178	68 - NO DMX ACTION - BLACK OUT
179-180	69 - reserved
181-182	70 - NO DMX ACTION - DEMO PROGRAM (STEPS 01..48)
183-184	71 - NO DMX ACTION - SINGLE CUE
185-194	72 - PAN NORMAL (DEFAULT)
195-204	73 - PAN REVERSE
205-214	74 - TILT NORMAL (DEFAULT)
215-224	75 - TILT REVERSE
225-227	76 - reserved
228-230	77 - reserved
231-234	78 - reserved
235-237	79 - FAN MODE STANDARD
238-240	80 - FAN MODE AUTO
241-244	81 - FAN MODE SILENT (DEFAULT)
245-246	82 - ZOOM SPEED 1 **(Speed value must not be set while CMY filters are moving during programming)**
247-248	83 - ZOOM SPEED 2 **(Speed value must not be set while CMY filters are moving during programming)**
249-250	84 - ZOOM SPEED 3 **(Speed value must not be set while CMY filters are moving during programming)**
251-252	85 - ZOOM SPEED 4 (DEFAULT) **(Speed value must not be set while CMY filters are moving during programming)**
253-255	86 - SET FUNCTION TO DEFAULT: -SMOOTH DIMMING = 4 -GAMMA = QUADRATIC -FREQUENCY = 610 Hz -CMY/CTO SPEED = 4 -DISPLAY STANDBY = DISABLE -NO DMX ACTION = KEEP LAST DMX -FAN = SILENT MODE -ZOOM SPEED = 4

DMX CHANNEL	37	Parameter: **RESET**

DMX value	Function
000-009	No effect
010-075	PAN TILT reset
076-095	HEAD MOTORS reset
096-115	Gobo wheel reset
116-135	Colour wheel reset
136-155	CMY/CTO reset
156-175	reserved
176-195	Prism reset
196-215	Frost - Smooth reset
216-239	Focus/Zoom reset
240-255	Total unit reset (PAN TILT + HEAD MOTORS)

21- ROTATING GOBO WHEEL

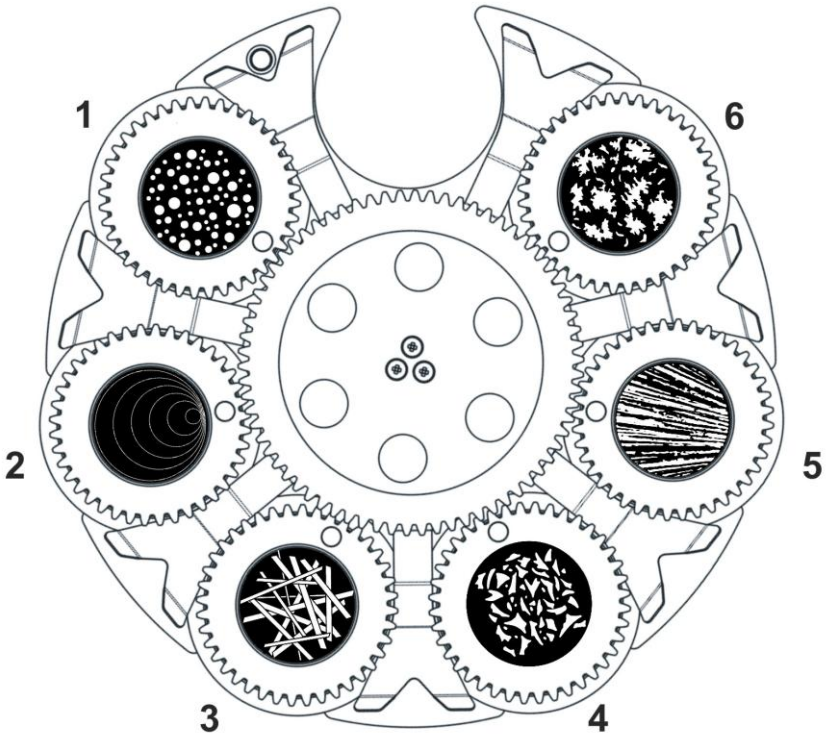

GOBO 1 DICRO

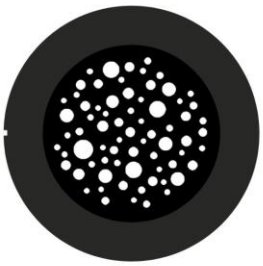

0516G136

GOBO 2 DICRO

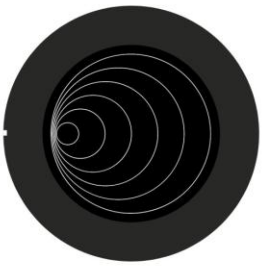

0516G137

GOBO 3 DICRO

0516G138

GOBO 4 DICRO

0516G139

GOBO 5 DICRO

0516G140

GOBO 6 DICRO

0516G141

22- FIXED GOBO WHEEL

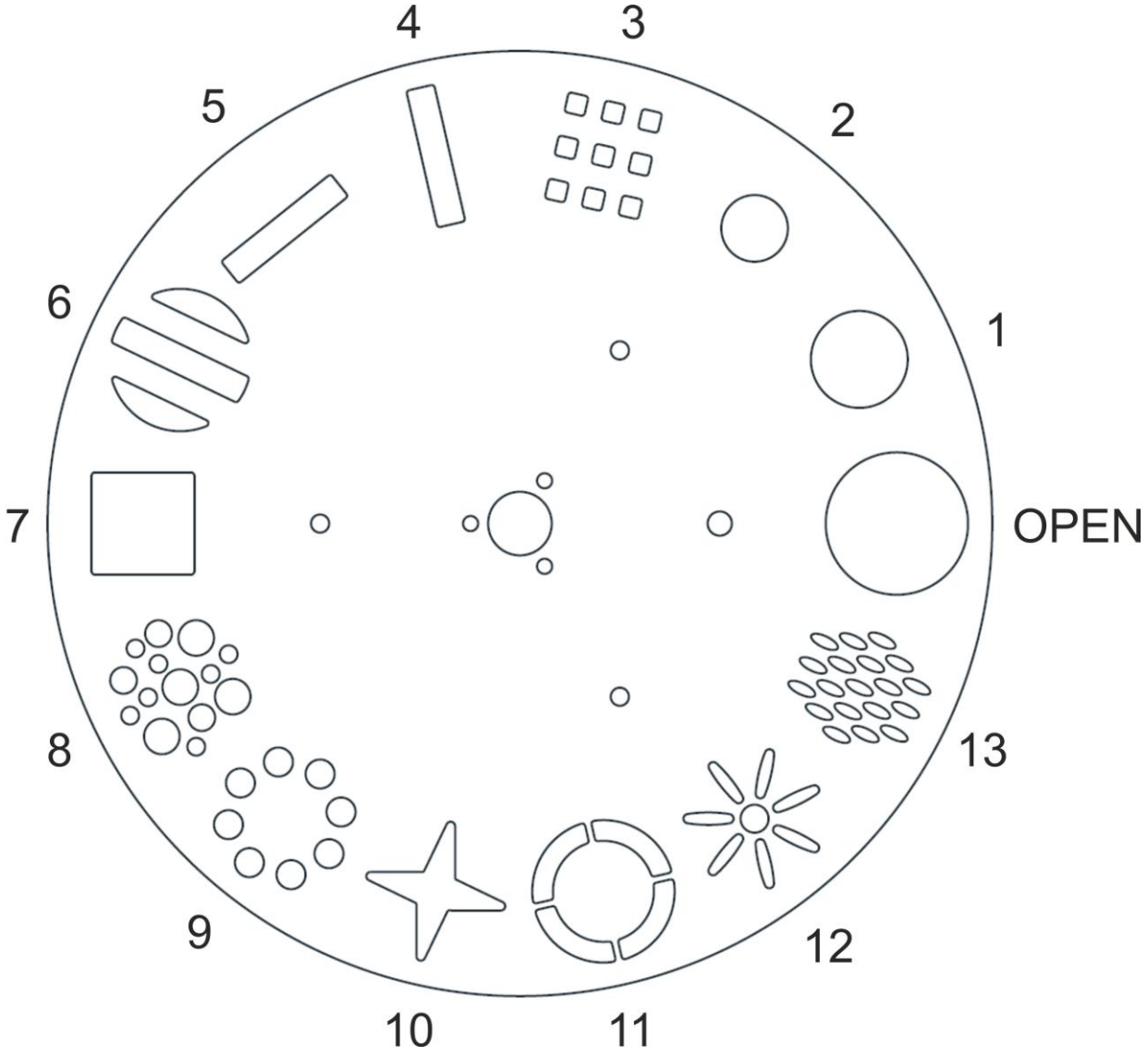

23- COLOUR WHEEL

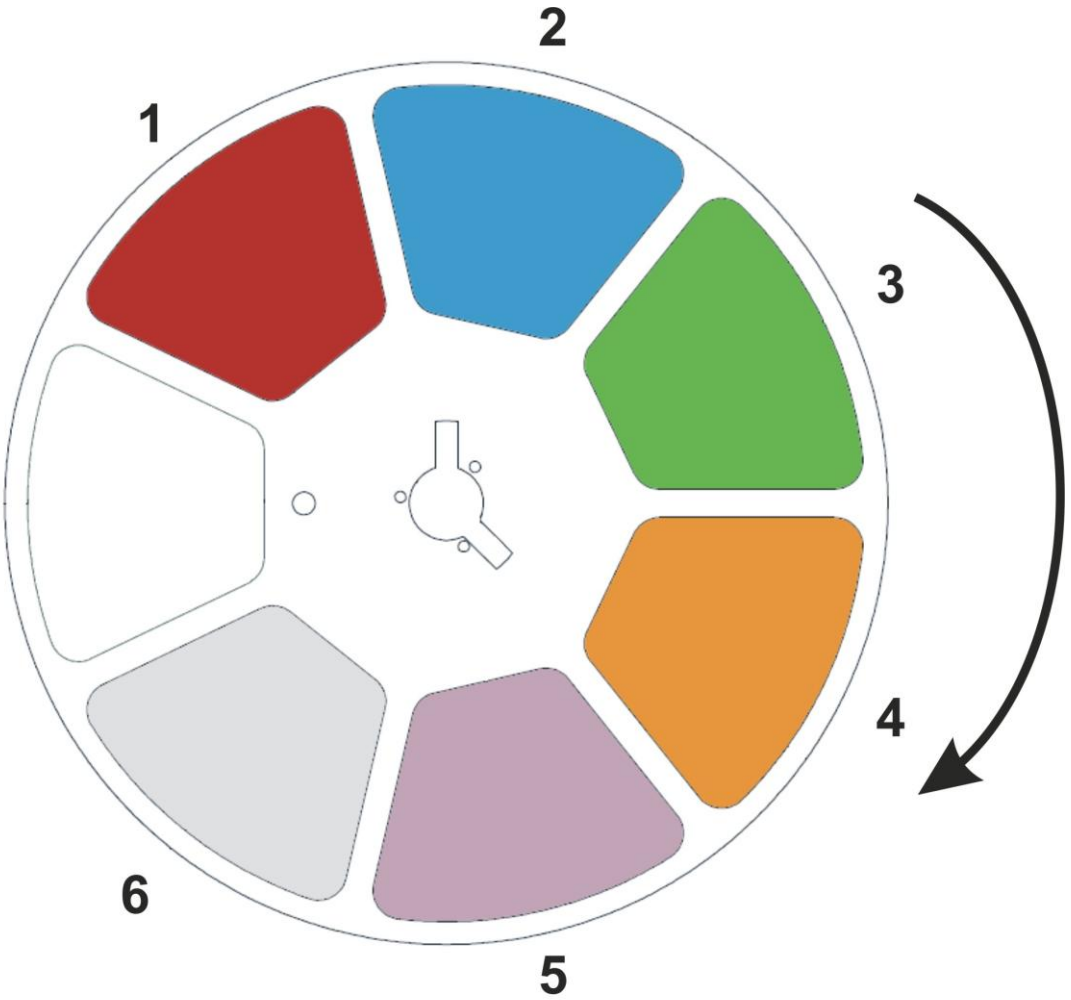

COLOUR 1	COLOUR 2	COLOUR 3	COLOUR 4	COLOUR 5	COLOUR 6
DARK RED	NAVY BLUE	DARK GREEN	AMBER	PURPLE	HIGHER CRI
0507C059.D23	0507C077.D23	0507C067.D23	0507C066.D23	0507C078.D23	0507K010.D23

NOTES

NOTES

NOTES

PROUDLY
MADE IN ITALY

DTS products are designed
and manufactured at the
DTS plants in Italy

ISO 9001:2008
DTS quality system is certified
to the ISO 9001:2008 standard

D.T.S. Illuminazione s.r.l. ● Via Fagnano Selve 12-14
47843 Misano Adriatico (RN) Italy
Tel.: +39 0541 611131 ● Fax +39 0541 611111
info@dts-lighting.it ● www.dts-lighting.it

0517I343