ROGUE R3 SPOT

User Manual

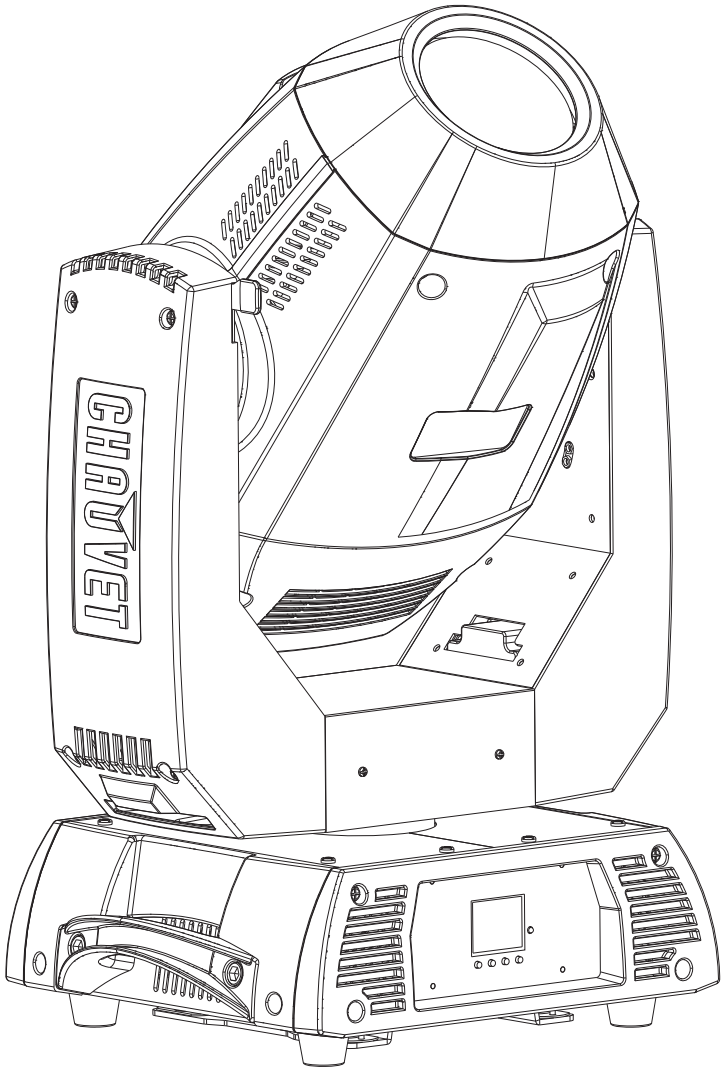

CHAUVET PROFESSIONAL

TABLE OF CONTENTS

1. Edition Notes 1
- Trademarks 1
- Copyright Notice 1
  - Manual Use 1
- Document Printing 1
- Intended Audience 1
- Disclaimer 1
- Document Revision 1

2. Before You Begin 2
- What Is Included 2
- Claims 2
- Manual Conventions 2
- Symbols 2
- Safety Notes 3
  - Personal Safety 3
  - Mounting and Rigging 3
  - Power and Wiring 3
- Operation 3
- Expected LED Lifespan 3

3. Introduction 4
- Description 4
- Features 4
- Product Overview 4
- Product Dimensions 5

4. Setup 6
- AC Power 6
  - AC Plug 6
  - Fuse Replacement 6
- Power Linking 6
- DMX Linking 6
  - DMX Personalities 6
- Mounting 7
  - Orientation 7
  - Rigging 7
  - Procedure 7
  - Gobos 8
  - Color 1 8
  - Color 2 8

5. Operation 10
- Control Panel Operation 10
  - Control Options 10
- Programming 10
  - Menu Map 11
- Address 13
- Run Mode 13
  - DMX Personality 13
  - Auto Test 13
  - Manual Test 13
- Setup 13
  - Tilt Reverse 13
  - Screen Reverse 13

Pan Angle 14
Tilt Angle 14
Pan and Tilt Blackout 14
Color Movement Blackout 14
Gobo Movement Blackout 14
Pulse Width Modulation 14
Fans 14
Reset Function 14
Factory Reset Function 15
System Information 15
Zoom 16
MAC Address 16
DMX Value 17
6. Technical Information 23
Product Maintenance 23
7. Technical Specifications 24
Photometric Charts 25
Returns 26
Contact Us 27

1. EDITION NOTES

The Rogue R3 Spot User Manual includes a description, safety precautions, installation, programming, operation and maintenance instructions for the Rogue R3 Spot as of the release date of this edition.

Trademarks

CHAUVET, the Chauvet logo and Rogue R3 Spot are registered trademarks or trademarks of Chauvet & Sons, LLC (d/b/a Chauvet and Chauvet Lighting) in the United States and other countries. Other company and product names and logos referred to herein may be trademarks of their respective companies.

Copyright Notice

The works of authorship contained in this manual, including, but not limited to, all design, text and images are owned by Chauvet.

© Copyright 2018 Chauvet & Sons, LLC. All rights reserved.

Electronically published by Chauvet in the United States of America.

Manual Use

Chauvet authorizes its customers to download and print this manual for professional information purposes only. Chauvet expressly prohibits the usage, copy, storage, distribution, modification, or printing of this manual or its content for any other purpose without written consent from Chauvet.

Document Printing

For best results, print this document in color, on letter size paper (8.5 x 11 in), double-sided. If using A4 paper (210 x 297 mm), configure the printer to scale the content accordingly.

Intended Audience

Any person installing, operating, and/or maintaining this product should completely read through the guide that shipped with the product, as well as this manual, before installing, operating, or maintaining this product.

Disclaimer

Chauvet believes that the information contained in this manual is accurate in all respects. However, Chauvet assumes no responsibility and specifically disclaims any and all liability to any party for any loss, damage or disruption caused by any errors or omissions in this document, whether such errors or omissions result from negligence, accident or any other cause. Chauvet reserves the right to revise the content of this document without any obligation to notify any person or company of such revision, however, Chauvet has no obligation to make, and does not commit to make, any such revisions. Download the latest version from www.chauvetprofessional.com

Document Revision

This Rogue R3 Spot User Manual is the 1st edition of this document. Go to www.chauvetprofessional.com for the latest version.

2. BEFORE YOU BEGIN

What Is Included

- Rogue R3 Spot
- Neutrik® powerCON® power cord
- 2 Omega brackets
- Warranty Card
- Quick Reference Guide

Claims

Carefully unpack the product immediately and check the container to make sure all the parts are in the package and are in good condition.

If the box or the contents (the product and included accessories) appear damaged from shipping, or show signs of mishandling, notify the carrier immediately, not Chauvet. Failure to report damage to the carrier immediately may invalidate your claim. In addition, keep the box and contents for inspection.

For other issues, such as missing components or parts, damage not related to shipping, or concealed damage, file a claim with Chauvet within 7 days of delivery.

Manual Conventions

Convention	Meaning
1–512	A range of values
50/60	A set of values of which only one can be chosen
<SET>	A button on the product's control panel
Settings	A product function or a menu option

Symbols

Symbol	Meaning
	Electrical warning. Not following these instructions may cause electrical damage to the product, accessories, or the user.
	Critical installation, configuration, or operation information. Not following these instructions may make the product not work, cause damage to the product, or cause harm to the operator.
	Important installation or configuration information. The product may not function correctly if this information is not used.
	Useful information.

Any reference to data or power connections in this manual assumes the use of Seetronic IP rated cables.

The term "DMX" used throughout this manual refers to the USITT DMX512-A digital data transmission protocol.

Safety Notes

Read all the following safety notes before working with this product. These notes contain important information about the installation, usage, and maintenance of this product.

This product contains no user-serviceable parts. Any reference to servicing in this User Manual will only apply to properly trained, certified technicians. Do not open the housing or attempt any repairs.

All applicable local codes and regulations apply to proper installation of this product.

Personal Safety

- Avoid direct eye exposure to the light source while the product is on.
- Always disconnect the product from the power source before cleaning or replacing the fuse.
- Always connect the product to a grounded circuit to avoid the risk of electrocution.
- Do not touch the product's housing when operating because it may be very hot.

Mounting and Rigging

- This product is for indoor use only! To prevent risk of fire or shock, do not expose this product to rain or moisture. (IP20).
- CAUTION: When transferring product from extreme temperature environments, (e.g., cold truck to warm, humid ballroom) condensation may form on the internal electronics of the product. To avoid causing a failure, allow product to fully acclimate to the surrounding environment before connecting it to power.
- Mount this product in a location with adequate ventilation, at least 20 in (50 cm) from adjacent surfaces.
- Make sure there are no flammable materials close to the product when operating.
- Always carry this product by the handles. Do not carry from the head.
- When hanging this product, always secure to a fastening device using a safety cable.

Power and Wiring

- Always make sure you are connecting the product to the proper voltage in accordance with the specifications in this manual or on the product's specification label.
- Never connect the product to a dimmer pack or rheostat.
- Never disconnect this product by pulling or tugging on the power cable.

Operation

- Do not operate this product if there is damage on the housing, lenses, or cables. Have the damaged parts replaced by an authorized technician at once.
- Do not cover the ventilation slots when operating to avoid internal overheating.
- The maximum ambient temperature is 113 °F (45 °C). Do not operate the product at higher temperatures.
- In the event of a serious operation problem, stop using this product immediately!

If your Chauvet product requires service, contact Chauvet Technical Support.

Expected LED Lifespan

LEDs gradually decline in brightness over time, primarily because of heat. LEDs that are arranged in clusters experience higher operating temperatures than single LEDs. For this reason, operating clustered LEDs at their fullest intensity significantly reduces the LEDs' lifespan. Under normal conditions, this lifespan is 40,000 to 50,000 hours. If extending this lifespan is vital, lower the operating temperature by improving the ventilation around the product, thus reducing the ambient temperature. In addition, limiting the overall projection intensity may extend the LEDs' lifespan.

3. INTRODUCTION

Description

Rogue R3 Spot delivers intense output, crisp optics, sharp focus and maintains a value proposition designed to maximize ROI. This moving spot has a bright 300 W LED light engine that produces an even field of light, as well as rotating and static gobos, (2) 8 position and split-color enabled color wheels, and three facet prism to create stunning looks. A quick moving zoom range of 13 – 37° adds to its flexibility of use by giving the Rogue R3 Spot the ability to cover large areas.

Features

- Intense 300 W LED light engine for bold beams
- Zoom angle of 13° to 37° to cover stages and surfaces from a distance
- Perfect gobo morphing between gobo wheels
- Two color wheels with 7 colors, split color ability, and continuous variable speed scrolling
- Iris, 3-facet prism, and frost for beam control
- 16-bit LED dimming for fade control
- Neutrik® powerCON® power input/output connections for power linking
- 3- and 5-pin DMX input/output connections
- RDM enabled for remote addressing and trouble shooting
- Selectable PWM settings to maintain flicker free operation on camera
- Simple and complex DMX channel profiles for programming versatility

Product Overview

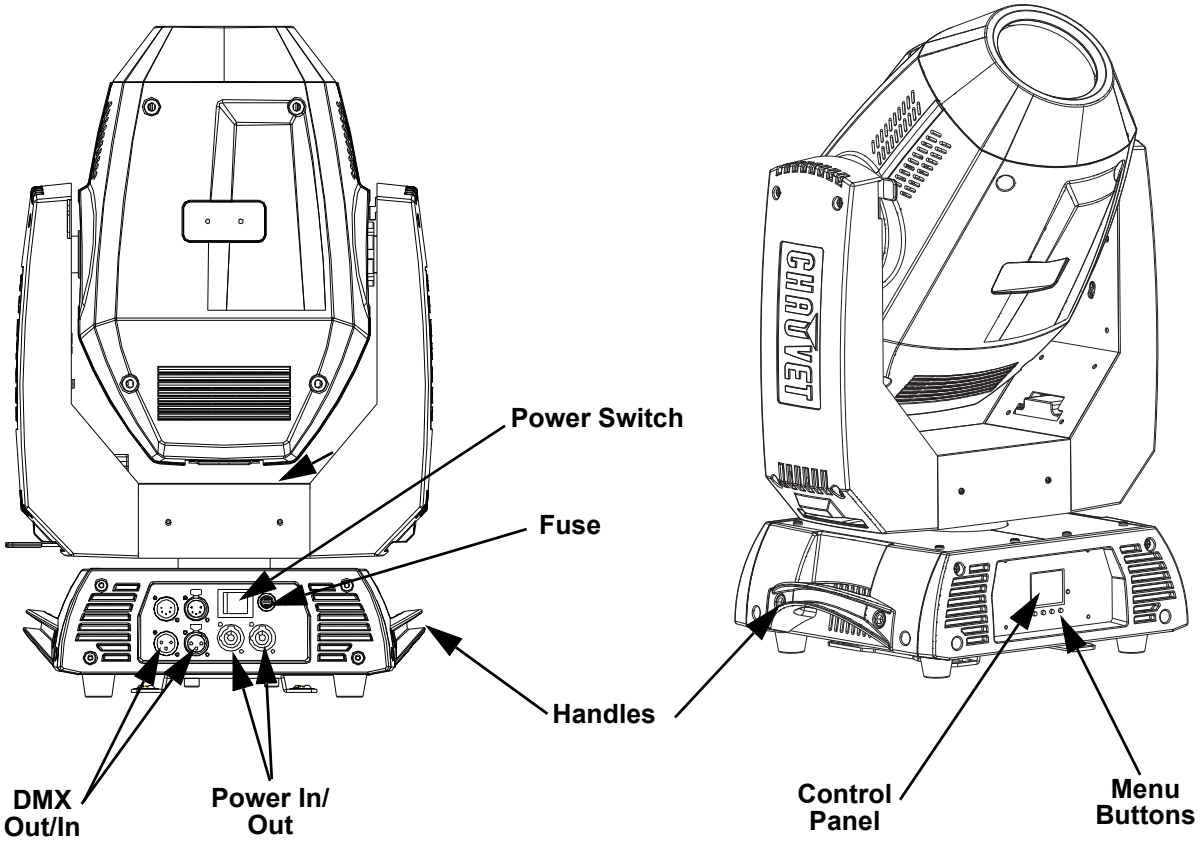

Product Dimensions

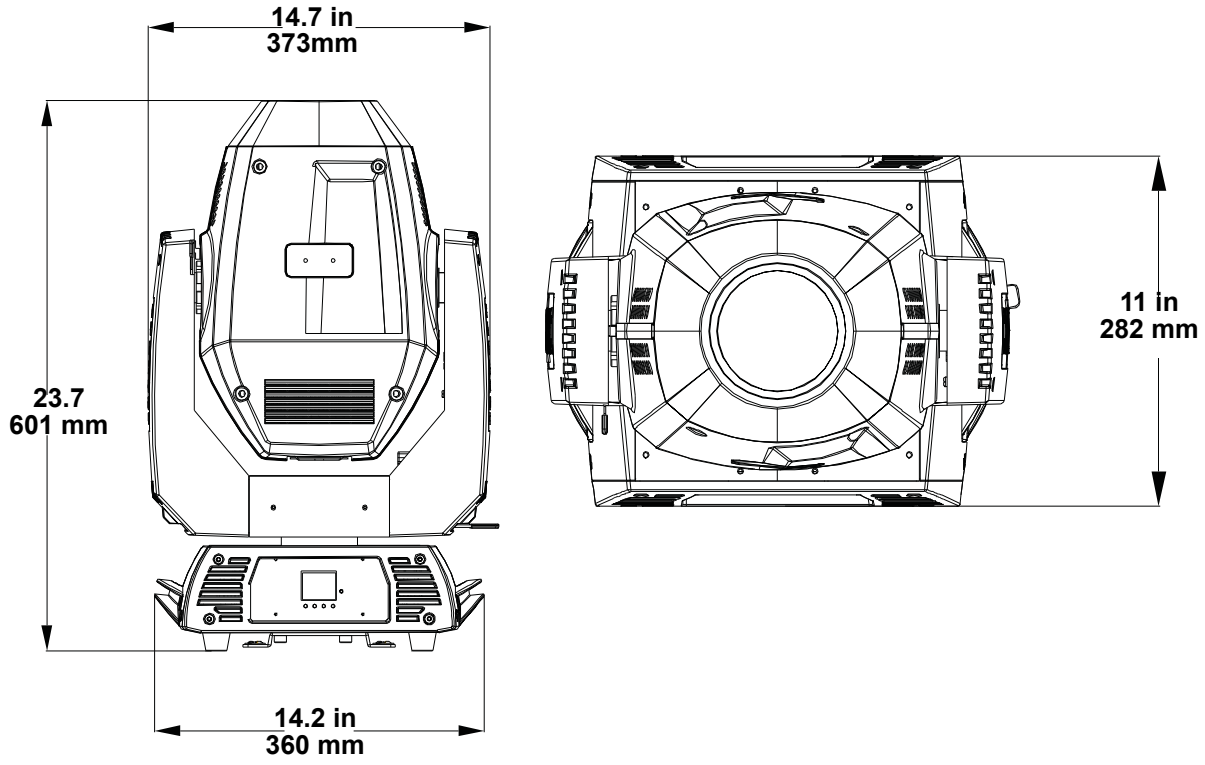

4. SETUP

AC Power

Each Rogue R3 Spot has an auto-ranging power supply that works with an input voltage range of 100 to 240 VAC, 50/60 Hz. To determine the power requirements for each Rogue R3 Spot, refer to the label affixed to the product. You can also refer to the Technical Specifications chart in this manual.

The listed current rating indicates the maximum current draw during normal operation. For more information, download Sizing Circuit Breakers from the Chauvet website: www.chauvetprofessional.com.

.

- **Always connect the product to a protected circuit (circuit breaker or fuse). Make sure the product has an appropriate electrical ground to avoid the risk of electrocution or fire.**
- **To eliminate unnecessary wear and improve its lifespan, during periods of non-use completely disconnect the product from power via breaker or by unplugging it.**

Never connect the product to a rheostat (variable resistor) or dimmer circuit, even if the rheostat or dimmer channel serves only as a 0 to 100% switch.

AC Plug

The Rogue R3 Spot comes with a power input cord terminated with a Neutrik® powerCON® connector on one end and an Edison plug on the other end (U.S. market). If the power input cord that came with your product has no plug, or if you need the change the plug, use the table below to wire the new plug.

Connection	Wire (U.S.)	Wire (Europe)	Screw Color
AC Live	Black	Brown	Yellow or Brass
AC Neutral	White	Blue	Silver
AC Ground	Green/Yellow	Green/Yellow	Green

Fuse Replacement

1. Disconnect this product from the power outlet.
2. Using a flat-head screwdriver, unscrew the fuse holder cap from the housing.
3. Remove the blown fuse and replace with a another fuse of the same type and rating.
4. Screw the fuse holder cap back in place and reconnect power.

Power Linking

The product supports power linking. You can power link up to 3 products at 120 V; up to 5 at 208 V; or up to 6 at 230 V.

This product comes with a power input cord. Power linking cables are available from Chauvet for purchase.

DMX Linking

You can link the Rogue R3 Spot to a DMX controller using a 3- or 5-pin DMX connection. If using other DMX-compatible products with this product, you can control each individually with a single DMX controller.

DMX Personalities

The Rogue R3 Spot uses a 3- or 5-pin DMX data connection for its 19-channel or 25-channel DMX personalities.

- Refer to the Introduction for a brief description of each DMX personality.
- Refer to the Operation chapter to learn how to configure the Rogue R3 Spot to work in these personalities.
- The DMX Values section provides detailed information regarding the DMX personalities.

If you are not familiar with or need more information about DMX standards, Master/Slave connectivity, or the DMX cables needed to link this product to a DMX controller, download the DMX Primer from the Chauvet website: www.chauvetprofessional.com.

Remote Device Management (RDM)

Remote Device Management, or RDM, is a standard for allowing DMX-enabled devices to communicate bi-directionally along existing DMX cabling. Check the DMX controller's User Manual or with the manufacturer as not all DMX controllers have this capability. The Rogue R3 Spot supports RDM protocol that allows feedback to make changes to menu map options.

Mounting

Before mounting the product, read and follow the safety recommendations indicated in the Safety Notes. For our CHAUVET Professional line of mounting clamps, go to http://trusst.com/products/.

Orientation

Always mount this product in a safe position, making sure there is adequate room for ventilation, configuration, and maintenance.

Rigging

Chauvet recommends using the following general guidelines when mounting this product.

- Before deciding on a location for the product, make sure there is easy access to the product for maintenance and programming purposes.
- Make sure that the structure onto which you are mounting the product can support the product's weight. See the Technical Specifications for weight information.
- When mounting the product overhead, always use a safety cable. Mount the product securely to a rigging point, whether an elevated platform or a truss.
- When rigging the product onto a truss, use a mounting clamp of appropriate weight capacity.
- When power linking multiple products, mount the products close enough for power linking cables to reach.
- The bracket adjustment knobs allow for directional adjustment when aiming the product to the desired angle. Only loosen or tighten the bracket knobs manually. Using tools could damage the knobs.

Procedure

The Rogue R3 Spot comes with a preinstalled mounting surface to which you will be able to attach the included omega bracket. Make sure the clamps are capable of supporting the weight of this product. Use at least 2 mounting points per product. In addition, use a safety cable to link the product to the structure. For the CHAUVET Professional line of mounting clamps, go to http://www.trusst.com/products.

Gobos

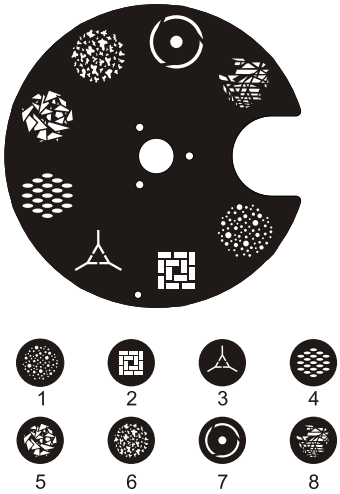

Color 1

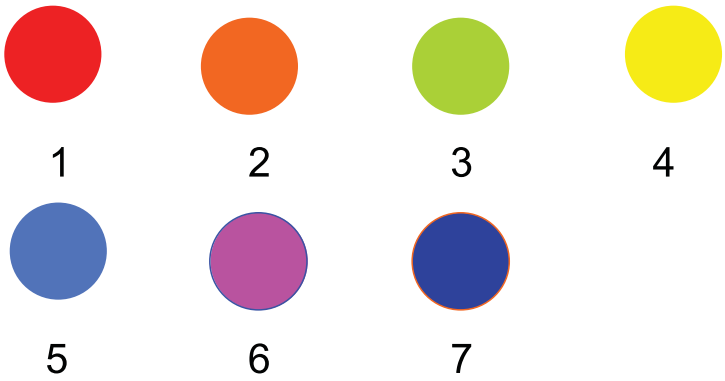

Color 2

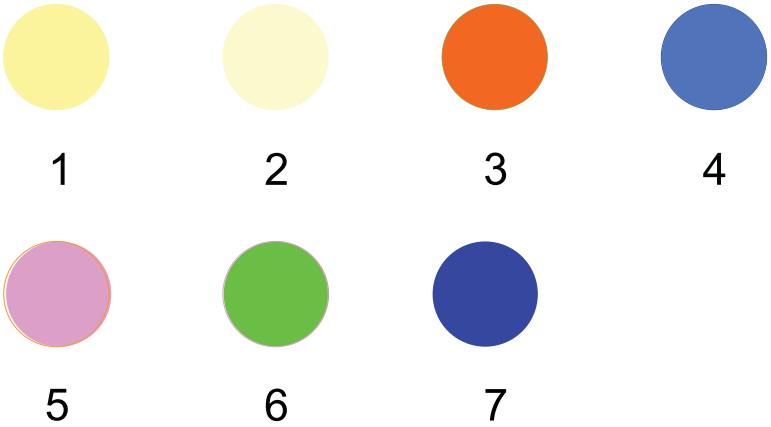

Mounting Diagram

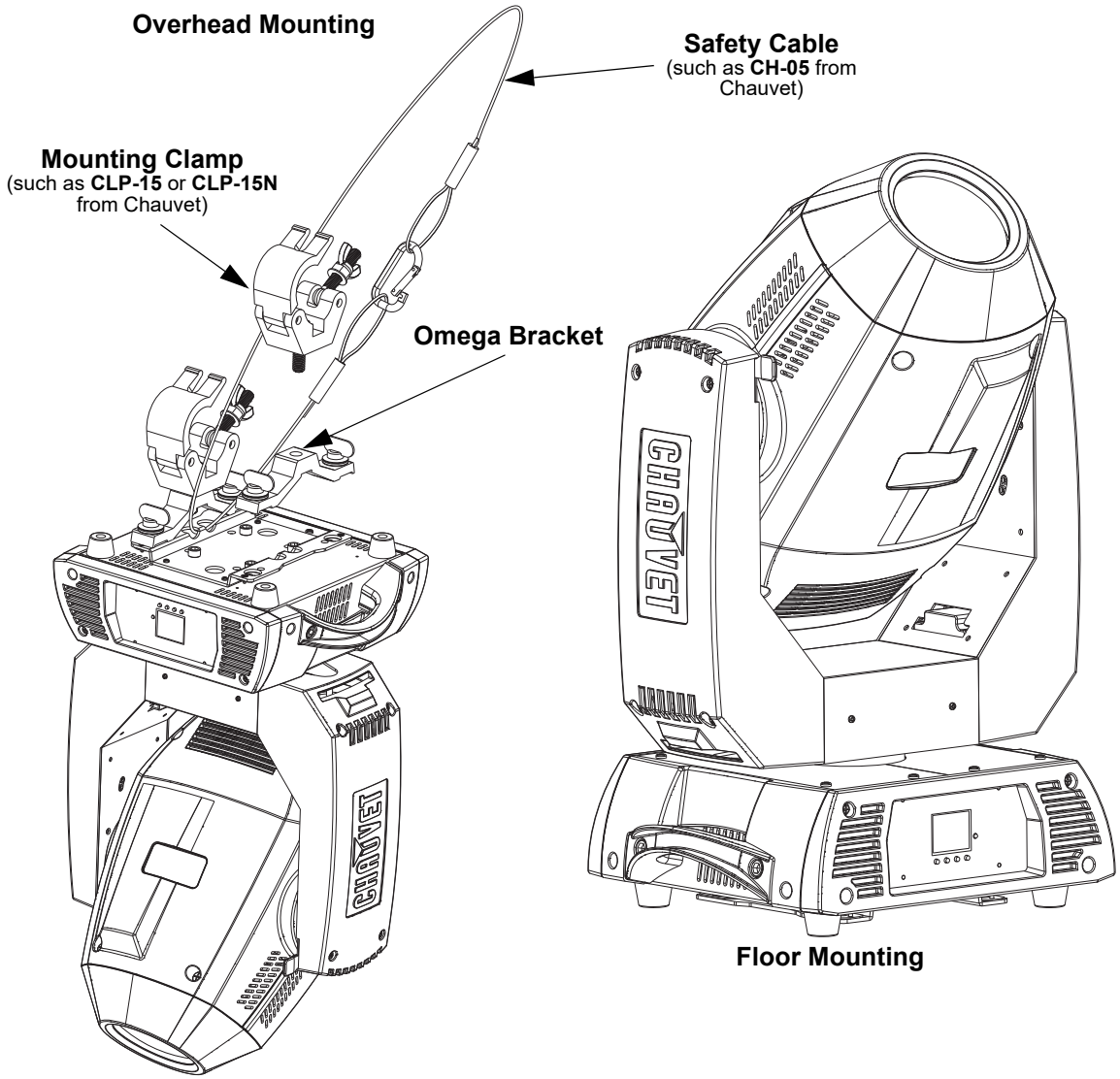

5. OPERATION

Control Panel Operation

Button	Function
<MENU>	Exits from the current menu or function
<ENTER>	Enables the currently displayed menu or sets the currently selected value in to the current function
<UP>	Navigates upward through the menu list or increases the numeric value when in a function
<DOWN>	Navigates downward through the menu list or decreases the numeric value when in a function

Control Options

Set the Rogue R3 Spot starting address in the 001-512 DMX range. This enables control of up to 20 products in the 25-channel 25 personality.

Programming

Refer to the Menu Map to understand the menu options. The menu map shows the main level and a variable number of programming levels for each option.

- To go to the desired main level, press **<MENU>** repeatedly until the option shows on the display. Press **<ENTER>** to select. This will take you to the first programming level for that option.
- To select an option or value within the current programming level, press **<UP>** or **<DOWN>** until the option shows on the display. Press **<ENTER>** to select. In this case, if there is another programming level, you will see that first option, or you will see the selected value.
- Press **<MENU>** repeatedly to exit to the previous main level.

Menu Map

Main Level	Programming Levels			Description
Address	**001-512**			Sets the DMX starting address
Running Mode	**DMX**	**25**		Selects the DMX mode
		19		
	Auto Test			Runs the product's test sequence
	Manual Test	**Pan**	**000-255**	Allows manual control of all settings from the control panel
		Pan Fine		
		Tilt		
		Tilt Fine		
		P/T Speed		
		Dimmer		
		Dimmer Fine		
		Shutter		
		Color 1		
		Color 2		
		Gobo		
		Gobo Rot		
		Gobo 2		
		Focus		
		Zoom		
		Prism		
		Prism Rotate		
		Iris		
		Frost		
		LED Ma. Fade		
		Background		
		P/T Macro		
		P/T Macro Speed		
		Special Function		

Main Level	Programming Levels			Description
Setup	Pan Reverse	YES		Reverse pan operation
		NO		Normal pan operation
	Tilt Reverse	YES		Reverse tilt operation
		NO		Normal tilt operation
	Screen Rev	YES		Normal control screen view
		NO		Rotates control screen view 180°
	Pan Angle	540		Selects the 540° pan angle range
		360		Selects the 360° pan angle range
		180		Selects the 180° pan angle range
	Tilt Angle	250		Selects the 250° tilt angle range
		180		Selects the 180° tilt angle range
		90		Selects the 90° tilt angle range
	BL.O.P/T Move	YES		Defines the pan/tilt move-in-black delay
		NO		
	BL.O.Color Move	YES		Defines the color change move-in-black delay
		NO		
	BL.O.Gobo Move	YES		Defines the gobo change move-in-black delay
		NO		
	PWM Option	600Hz		Selects the PWM output frequency
		1200Hz		
		6000Hz		
		15KHz		
	Fans	ECO		Change the fans speed mode
		Auto		
Setup	Reset Function	Pan/Tilt	YES	Resets pan/tilt functions to the home position
			NO	
		Prism	YES	Resets all prism functions to the home position
			NO	
		Color/Frost	YES	Resets all color and frost functions to the home position
			NO	
		Gobo&R/ Gobo2	YES	Resets all gobo functions to the home position
			NO	
		Focus/Iris	YES	Resets the focus and iris functions to the home position
			NO	
		All	YES	Resets all functions to the home position
			NO	
	Factory Settings	YES		Reverts the product back to the original factory settings
		NO		
Sys Info	Ver			Displays the software version
	Running Mode			Displays the current running mode
	DMX Address			Displays the current DMX address
	Temperature			Displays the product's temperature in Celsius
	Fixture Time			Displays the product's total time running
	UID			Shows product UID

Address

This programming level sets the DMX starting address. In this mode, each product will respond to a unique starting address from the DMX controller. All products with the same starting address will respond in unison. This option sets the products DMX address.

1. Starting from the Main Level screen, select **Address,** press **<ENTER>.**
2. Select the starting address **(001–512)**, press **<ENTER>.**

Run Mode

This programming level sets the DMX personality and controls the different test modes.

- Starting from the Main Level screen, select **Running Mode,** press **<ENTER>**.

DMX Personality

This setting allows you to choose a particular DMX personality.

1. Highlight **DMX**, press **<ENTER>**.
2. Select the DMX personality **19CH** or **25CH**press **<ENTER>**..

- See the DMX Value section for the highest starting address you can select for each personality.
- Make sure that the starting addresses on the various products do not overlap due to the new personality setting.

Auto Test

This option runs every attribute individually through 1 cycle.

- Highlight **Auto Test**, press **<ENTER>**.

- The Auto Test will end after 1 full cycle. You can stop the test by pressing **<MENU>** at any time

Manual Test

This option allows you to run each attribute individually or as a group.

1. Highlight **Manual Test**, press **<ENTER>**.
2. Highlight the desired attribute listed on the control panel screen, press **<ENTER>**.
3. Set the attribute value (**000–255**), press <**ENTER**>.
4. Repeat step 2 for the other attributes.

- When exiting the Manual Test level, the values of all tested channels will revert to zero.

Setup

This programming level controls the product's head movement, display, dimming, and fan adjustments.

- Starting from the Main Level screen, select **Setup,** press **<ENTER>**.

Pan Reverse

Reverses the operation of the pan attribute.

1. Highlight **Pan Reverse**, press **<ENTER>**.
2. Select **OFF** or **ON**, press **<ENTER>**

Tilt Reverse

Reverses the operation of the tilt attribute.

1. Highlight **Tilt Reverse**, press **<ENTER>**.
2. Select **OFF** or **ON**, press **<ENTER>**

Screen Reverse

Reverses the operation of the tilt attribute.

1. Highlight **Screen Reverse**, press **<ENTER>**.
2. Select **OFF** or **ON**, press **<ENTER>**

Pan Angle

This option assigns pan range.

1. Highlight **Pan Angle**, press **<ENTER>**.
2. Select **540**, **360**, or **180**, press **<ENTER>**.

Tilt Angle

This option assigns tilt range.

1. Highlight **Tilt Angle**, press **<ENTER>**.
2. Select **90**, **180**, or **250**, press **<ENTER>**.

Pan and Tilt Blackout

This option assigns engages the shutter to block all light output whenever the product's head is in movement.

1. Highlight **BL.O.P/T Move,** press **<ENTER>**.
2. Select **Yes** or **No**, press **<ENTER>**.

Color Movement Blackout

This option engages the shutter to block all light output whenever the product's color wheel is in motion.

1. Highlight **BL.O.ColorMove**, press **<ENTER>**.
2. Select **YES** or **NO**, press **<ENTER>**.

Gobo Movement Blackout

This option engages the shutter to block all light output whenever the product's gobo wheel is in motion.

1. Highlight **BL.O.GoboMove**, press **<ENTER>**.
2. Select **YES** or **NO**, press **<ENTER>**.

Pulse Width Modulation

To set the PWM frequency, follow the instructions below:

1. Navigate to the **Setup** menu.
2. Use **<UP>** or **<DOWN>** to select **PWM Option**, or touch the display where it says **PWM Option**.
3. If using the buttons instead of the touchscreen, press **<ENTER>**.
4. Use **<UP>**, **<DOWN>**, **<LEFT>**, or **<RIGHT>** to select the PWM frequency, from **600Hz**, **1200Hz**, **2000Hz**, **4000Hz**, **6000Hz**, or **15000Hz**, or touch the display where it says the desired option.
5. Press **<ENTER>**.

Fans

This option allows you to choose a fan mode. **AUTO** mode controls the fan speed based on the temperature of the LED's. In **ECO** mode, fans will stay as quiet as possible and allow the output of the LEDs to decrease by about 20% over time depending on the ambient temperature. As the ambient temperature increases, the output of the LEDs will decrease.

1. Highlight **Fans**, press **<ENTER>**.
2. Select **Auto** or **ECO**, press **<ENTER>**.

Reset Function

This programming level allows the user to reset individual functions to the home position.

- Starting from the **Setup** screen level, select **Reset Function,** press **<ENTER>**.

Pan/Tilt Reset

This option resets the Pan/Tilt functions to the home position.

1. Highlight **Pan/Tilt**, press **<ENTER>**.
2. Select **YES** or **NO**, press **<ENTER>**.

Prism Reset

This option resets the Prism functions to the home position.

1. Highlight **Prism**, press **<ENTER>**.
2. Select **YES** or **NO**, press **<ENTER>**.

Color/Frost Reset

This option resets the Color/Frost functions to the home position.

1. Highlight **Color/Frost**, press **<ENTER>**.
2. Select **YES** or **NO**, press **<ENTER>**.

Gobo&R/Gobo2 Reset

This option resets the Color/Frost functions to the home position.

1. Highlight **Gobo&R/FGobo2**, press **<ENTER>**.
2. Select **YES** or **NO**, press **<ENTER>**.

Focus/Iris Reset

This option resets the Zoom function to the home position.

1. Highlight **Focus/Iris**, press **<ENTER>**.
2. Select **YES** or **NO**, press **<ENTER>**.

All Reset

This option resets the all the functions to the home position.

1. Highlight **All**, press **<ENTER>**.
2. Select **YES** or **NO**, press **<ENTER>**.

Factory Reset Function

This reverts the product back to its original factory settings.

• Starting from the **Setup** screen level, select **Factory Settings,** select **<YES/NO>** and press **<ENTER>.**.

System Information

This programming level shows standard information regarding the product's operating status. Starting from the Main Level screen, select **Sys Info,** press **<ENTER>**.

- **Ver:** The current software version is displayed on the screen.
- **Running Mode:** The current Running mode is displayed on the screen.
- **DMX Address:** The current DMX address is displayed on the screen.
- **Temperature:** The current product temperature is displayed on the screen.
- **Fixture Time:** The product's total running time.
- **UID:** Shows the product's UID

Offset Mode Offset Mode

The Offset mode provides fine adjustments for the home position of all the moving parts in the optical path as well as the pan and tilt movements. This way, when in their home position, the moving parts do not show any border or reduce the light output.

1. Starting from the Main Level screen, Press and hold **<MENU>** until the passcode screen appears.
2. Using **<UP>** to increase the number value and **<DOWN>** to move to the next column, enter **2323**, press **<ENTER>**. This brings you into the Zero Adjust menu screen.

Pan

1. Highlight **PAN**, press **<ENTER>**.
2. Select **000–255**, press **<ENTER>**.

Tilt

1. Highlight **TILT**, press **<ENTER>**.
2. Select **000–255**, press **<ENTER>**.

Gobo

1. Highlight **GOBO**, press **<ENTER>**.
2. Select **000–255**, press **<ENTER>**.

Gobo Rotate

1. Highlight **GOBO ROT**, press **<ENTER>**.
2. Select **000–255**, press **<ENTER>**.

Gobo 2

1. Highlight **GOBO2**, press **<ENTER>**.
2. Select **000–255**, press **<ENTER>**.

Color 1

1. Highlight **COLOR1**, press **<ENTER>**.
2. Select **000–255**, press **<ENTER>**.

Color 2

1. Highlight **COLOR2**, press **<ENTER>**.
2. Select **000–255**, press **<ENTER>**.

Prism

1. Highlight **PRISM**, press **<ENTER>**.
2. Select **000–255**, press **<ENTER>**.

Focus

1. Highlight **FOCUS**, press **<ENTER>**.
2. Select **000–255**, press **<ENTER>**.

Focus Gobo 2

1. Highlight **FOCUS**, press **<ENTER>**.
2. Select **000–255**, press **<ENTER>**.

Zoom

1. Highlight **ZOOM**, press **<ENTER>**.
2. Select **000–255**, press **<ENTER>**.

Iris

1. Highlight **IRIS**, press **<ENTER>**.
2. Select **000–255**, press **<ENTER>**.

Frost

1. Highlight **FROST**, press **<ENTER>**.
2. Select **000–255**, press **<ENTER>**.

Dimmer

1. Highlight **DIMMER**, press **<ENTER>**.
2. Select **000–255**, press **<ENTER>**.

MAC Address

To adjust the fourth, fifth, or sixth MAC address, do the following:

1. Use **<UP>** or **<DOWN>** to select MAC4, MAC5, or MAC6.
2. Press **<ENTER>**.
3. Use **<UP>** or **<DOWN>** to increase or decrease the value, from **000-255**.

DMX Value

25CH

Channel	Function	Value	Percent/Setting
1	Pan	000 ⇔ 255	0-100%
2	Fine Pan	000 ⇔ 255	Fine control (16-bit)
3	Tilt	000 ⇔ 255	0-100%
4	Fine Tilt	000 ⇔ 255	Fine control (16-bit)
5	Pan/Tilt Speed	000 ⇔ 255	0-100%
6	Dimmer	000 ⇔ 255	0-100%
7	Fine Dimmer	000 ⇔ 255	Fine control (16-bit)
8	Strobe	000 ⇔ 003	Off
		004 ⇔ 007	On
		008 ⇔ 076	Synchronizing strobe with increasing speed
		077 ⇔ 145	Pulse strobe with increasing speed
		146 ⇔ 215	Random strobe with increasing speed
		216 ⇔ 255	On
9	Color 1	000 ⇔ 007	White
		008 ⇔ 015	Color 1
		016 ⇔ 023	Color 2
		024 ⇔ 031	Color 3
		032 ⇔ 039	Color 4
		040 ⇔ 047	Color 5
		048 ⇔ 055	Color 6
		056 ⇔ 063	Color 7
		064 ⇔ 071	White + Color 1
		072 ⇔ 079	Color 1 + Color 2
		080 ⇔ 087	Color 2 + Color 3
		088 ⇔ 095	Color 3 + Color 4
		096 ⇔ 103	Color 4 + Color 5
		104 ⇔ 111	Color 5 + Color 6
		112 ⇔ 119	Color 6 + Color 7
		120 ⇔ 127	Color 7 + White
		128 ⇔ 191	Clockwise color scroll, slow to fast
		192 ⇔ 255	Counter-clockwise color scroll, slow to fast
10	Color 2	000 ⇔ 007	White
		008 ⇔ 015	Color 1
		016 ⇔ 023	Color 2
		024 ⇔ 031	Color 3
		032 ⇔ 039	Color 4
		040 ⇔ 047	Color 5
		048 ⇔ 055	Color 6
		056 ⇔ 063	Color 7
		064 ⇔ 071	White + Color 1
		072 ⇔ 079	Color 1 + Color 2
		080 ⇔ 087	Color 2 + Color 3
		088 ⇔ 095	Color 3 + Color 4
		096 ⇔ 103	Color 4 + Color 5
		104 ⇔ 111	Color 5 + Color 6
		112 ⇔ 119	Color 6 + Color 7
		120 ⇔ 127	Color 7 + White
		128 ⇔ 191	Clockwise color scroll, slow to fast
		192 ⇔ 255	Counter-clockwise color scroll, slow to fast

Channel	Function	Value	Percent/Setting
11	Rotating Gobo Wheel 1	000 ⇔ 007	Open
		008 ⇔ 015	Gobo 1
		016 ⇔ 023	Gobo 2
		024 ⇔ 031	Gobo 3
		032 ⇔ 039	Gobo 4
		040 ⇔ 047	Gobo 5
		048 ⇔ 055	Gobo 6
		056 ⇔ 063	Gobo 7
		064 ⇔ 071	Gobo 7 shake, from slow to fast
		072 ⇔ 079	Gobo 6 shake, from slow to fast
		080 ⇔ 087	Gobo 5 shake, from slow to fast
		088 ⇔ 095	Gobo 4 shake, from slow to fast
		096 ⇔ 103	Gobo 3 shake, from slow to fast
		104 ⇔ 111	Gobo 2 shake, from slow to fast
		112 ⇔ 119	Gobo 1 shake, from slow to fast
		120 ⇔ 127	Open
		128 ⇔ 191	Clockwise color scroll, slow to fast
		192 ⇔ 255	Counter-clockwise color scroll, slow to fast
12	Rotating Gobo Wheel 2	000 ⇔ 063	Rotating gobo index
		064 ⇔ 147	Clockwise rotation, from slow to fast
		148 ⇔ 231	Counter clockwise rotation, from slow to fast
		232 ⇔ 255	Bounce effect
13	Static Gobo Wheel	000 ⇔ 006	Open
		007 ⇔ 013	Gobo 1
		014 ⇔ 020	Gobo 2
		021 ⇔ 027	Gobo 3
		028 ⇔ 034	Gobo 4
		035 ⇔ 041	Gobo 5
		042 ⇔ 048	Gobo 6
		049 ⇔ 055	Gobo 7
		056 ⇔ 063	Gobo 8
		064 ⇔ 071	Gobo 8 shake, from slow to fast
		072 ⇔ 078	Gobo 7 shake, from slow to fast
		079 ⇔ 085	Gobo 6 shake, from slow to fast
		086 ⇔ 092	Gobo 5 shake, from slow to fast
		093 ⇔ 099	Gobo 4 shake, from slow to fast
		100 ⇔ 106	Gobo 3 shake, from slow to fast
		107 ⇔ 113	Gobo 2 shake, from slow to fast
		114 ⇔ 120	Gobo 1 shake, from slow to fast
		121 ⇔ 127	Open
		128 ⇔ 191	Clockwise rotation, from slow to fast
		192 ⇔ 255	Counter clockwise rotation, from slow to fast
14	Focus	000 ⇔ 255	0-100%
15	Fine Focus	000 ⇔ 255	Fine control (16-bit)
16	Auto Focus	000 ⇔ 000	No function
		001 ⇔ 012	5 meters (static gobo wheel)
		013 ⇔ 024	6 meters (static gobo wheel)
		025 ⇔ 036	7 meters (static gobo wheel)
		037 ⇔ 048	8 meters (static gobo wheel)
		049 ⇔ 060	9 meters (static gobo wheel)
		061 ⇔ 072	10 meters (static gobo wheel)
		073 ⇔ 084	15 meters (static gobo wheel)
		085 ⇔ 100	20 meters (static gobo wheel)
		101 ⇔ 127	Auto focus (static gobo wheel)
		128 ⇔ 139	5 meters (rotating gobo wheel)
		140 ⇔ 151	6 meters (rotating gobo wheel)
		152 ⇔ 163	7 meters (rotating gobo wheel)
		164 ⇔ 175	8 meters (rotating gobo wheel)
		176 ⇔ 187	9 meters (rotating gobo wheel)
		188 ⇔ 199	10 meters (rotating gobo wheel)
		200 ⇔ 211	15 meters (rotating gobo wheel)
		212 ⇔ 227	20 meters (rotating gobo wheel)
		228 ⇔ 255	Auto focus (rotating gobo wheel)

Channel	Function	Value	Percent/Setting
17	Zoom	000 ⇔ 255	0-100%
18	Fine Zoom	000 ⇔ 255	Fine Control (16-bit)
19	Prism	000 ⇔ 004 005 ⇔ 255	No function Prism Effect
20	Rotating Prism	000 ⇔ 127 128 ⇔ 189 190 ⇔ 193 194 ⇔ 255	Prism index Clockwise rotation, fast to slow Hold Counter-clockwise rotation, slow to fast
21	Iris	000 ⇔ 063 064 ⇔ 127 128 ⇔ 191 192 ⇔ 255	Big to small Auto change, slow to fast Slow zoom out, fast zoom in (slow to fast) Slow zoom in, fast zoom out (slow to fast)
22	Frost	000 ⇔ 004 005 ⇔ 255	No function Frost effect
23	Auto Program	000 ⇔ 007 008 ⇔ 015 016 ⇔ 023 024 ⇔ 031 032 ⇔ 039 040 ⇔ 047 048 ⇔ 055 056 ⇔ 063 064 ⇔ 071 072 ⇔ 079 080 ⇔ 087 088 ⇔ 095 096 ⇔ 103 104 ⇔ 111 112 ⇔ 119 120 ⇔ 127 128 ⇔ 135 136 ⇔ 143 144 ⇔ 151 152 ⇔ 159 160 ⇔ 167 168 ⇔ 175 176 ⇔ 183 184 ⇔ 191 192 ⇔ 199 200 ⇔ 207 208 ⇔ 215 216 ⇔ 223 224 ⇔ 231 232 ⇔ 239 240 ⇔ 255	Auto program1 Auto program 2 Auto program3 Auto program 4 Auto program 5 Auto program 6 Auto program 7 Auto program 8 Auto program 9 Auto program 10 Auto program 11 Auto program 12 Auto program 13 Auto program 14 Auto program 15 Auto program 16 Auto program 17 Auto program 18 Auto program 19 Auto program 20 Auto program 21 Auto program 22 Auto program 23 Auto program 24 Auto program 25 Auto program 26 Auto program 27 Auto program 28 Auto program 29 Auto program 30 Auto program 31
24	Auto Speed	000 ⇔ 255	Slow to fast

Channel	Function	Value	Percent/Setting
25	Control	000 ⇔ 007	No function
		008 ⇔ 015	Blackout during pan/tilt
		016 ⇔ 023	Blackout while color wheel is moving
		024 ⇔ 031	Blackout while gobo wheel is moving
		032 ⇔ 039	Blackout while pan/tilt/moving color wheel
		040 ⇔ 047	Blackout while pan/tilt/moving gobo wheel
		048 ⇔ 055	Blackout while pan/tilt/moving color wheel/moving gobo wheel
		056 ⇔ 087	No function
		088 ⇔ 095	No function
		096 ⇔ 103	Pan reset
		104 ⇔ 111	Tilt reset
		112 ⇔ 119	Color Reset
		120 ⇔ 127	Gobo reset
		128 ⇔ 135	No function
		136 ⇔ 143	Prism reset
		144 ⇔ 151	No function
		152 ⇔ 159	All reset
		160 ⇔ 167	Iris reset
		168 ⇔ 175	Frost reset
		176 ⇔ 183	Zoom reset
		184 ⇔ 239	No function
		240 ⇔ 247	No function
		248 ⇔ 255	No function

19CH

Channel	Function	Value	Percent/Setting
1	Pan	000 ⇔ 255	0-100%
2	Fine Pan	000 ⇔ 255	Fine control (16-bit)
3	Tilt	000 ⇔ 255	0-100%
4	Fine Tilt	000 ⇔ 255	Fine control (16-bit)
5	Pan/Tilt Speed	000 ⇔ 255	0-100%
6	Dimmer	000 ⇔ 255	0-100%
7	Strobe	000 ⇔ 003	Off
		004 ⇔ 007	On
		008 ⇔ 076	Synchronizing strobe with increasing speed
		077 ⇔ 145	Pulse strobe with increasing speed
		146 ⇔ 215	Random strobe with increasing speed
		216 ⇔ 255	On
8	Color 1	000 ⇔ 007	White
		008 ⇔ 015	Color 1
		016 ⇔ 023	Color 2
		024 ⇔ 031	Color 3
		032 ⇔ 039	Color 4
		040 ⇔ 047	Color 5
		048 ⇔ 055	Color 6
		056 ⇔ 063	Color 7
		064 ⇔ 071	White + Color 1
		072 ⇔ 079	Color 1 + Color 2
		080 ⇔ 087	Color 2 + Color 3
		088 ⇔ 095	Color 3 + Color 4
		096 ⇔ 103	Color 4 + Color 5
		104 ⇔ 111	Color 5 + Color 6
		112 ⇔ 119	Color 6 + Color 7
		120 ⇔ 127	Color 7 + White
		128 ⇔ 191	Clockwise color scroll, slow to fast
		192 ⇔ 255	Counter-clockwise color scroll, slow to fast

Channel	Function	Value	Percent/Setting
9	Color 2	000 ⇔ 007	White
		008 ⇔ 015	Color 1
		016 ⇔ 023	Color 2
		024 ⇔ 031	Color 3
		032 ⇔ 039	Color 4
		040 ⇔ 047	Color 5
		048 ⇔ 055	Color 6
		056 ⇔ 063	Color 7
		064 ⇔ 071	White + Color 1
		072 ⇔ 079	Color 1 + Color 2
		080 ⇔ 087	Color 2 + Color 3
		088 ⇔ 095	Color 3 + Color 4
		096 ⇔ 103	Color 4 + Color 5
		104 ⇔ 111	Color 5 + Color 6
		112 ⇔ 119	Color 6 + Color 7
		120 ⇔ 127	Color 7 + White
		128 ⇔ 191	Clockwise color scroll, slow to fast
		192 ⇔ 255	Counter-clockwise color scroll, slow to fast
10	Rotating Gobo Wheel 1	000 ⇔ 007	Open
		008 ⇔ 015	Gobo 1
		016 ⇔ 023	Gobo 2
		024 ⇔ 031	Gobo 3
		032 ⇔ 039	Gobo 4
		040 ⇔ 047	Gobo 5
		048 ⇔ 055	Gobo 6
		056 ⇔ 063	Gobo 7
		064 ⇔ 071	Gobo 7 shake, from slow to fast
		072 ⇔ 079	Gobo 6 shake, from slow to fast
		080 ⇔ 087	Gobo 5 shake, from slow to fast
		088 ⇔ 095	Gobo 4 shake, from slow to fast
		096 ⇔ 103	Gobo 3 shake, from slow to fast
		104 ⇔ 111	Gobo 2 shake, from slow to fast
		112 ⇔ 119	Gobo 1 shake, from slow to fast
		120 ⇔ 127	Open
		128 ⇔ 191	Clockwise color scroll, slow to fast
		192 ⇔ 255	Counter-clockwise color scroll, slow to fast
11	Rotating Gobo Wheel 2	000 ⇔ 063	Rotating gobo index
		064 ⇔ 147	Clockwise rotation, from slow to fast
		148 ⇔ 231	Counter clockwise rotation, from slow to fast
		232 ⇔ 255	Bounce effect
12	Static Gobo Wheel	000 ⇔ 006	Open
		007 ⇔ 013	Gobo 1
		014 ⇔ 020	Gobo 2
		021 ⇔ 027	Gobo 3
		028 ⇔ 034	Gobo 4
		035 ⇔ 041	Gobo 5
		042 ⇔ 048	Gobo 6
		049 ⇔ 055	Gobo 7
		056 ⇔ 063	Gobo 8
		064 ⇔ 071	Gobo 8 shake, from slow to fast
		072 ⇔ 078	Gobo 7 shake, from slow to fast
		079 ⇔ 085	Gobo 6 shake, from slow to fast
		086 ⇔ 092	Gobo 5 shake, from slow to fast
		093 ⇔ 099	Gobo 4 shake, from slow to fast
		100 ⇔ 106	Gobo 3 shake, from slow to fast
		107 ⇔ 113	Gobo 2 shake, from slow to fast
		114 ⇔ 120	Gobo 1 shake, from slow to fast
		121 ⇔ 127	Open
		128 ⇔ 191	Clockwise rotation, from slow to fast
		192 ⇔ 255	Counter clockwise rotation, from slow to fast
13	Focus	000 ⇔ 255	0-100%
14	Zoom	000 ⇔ 255	0-100%

Channel	Function	Value	Percent/Setting
15	**Prism**	000 ⇔ 004 005 ⇔ 255	No function Prism Effect
16	**Rotating Prism**	000 ⇔ 127 128 ⇔ 189 190 ⇔ 193 194 ⇔ 255	Prism index Clockwise rotation, fast to slow Hold Counter-clockwise rotation, slow to fast
17	**Iris**	000 ⇔ 063 064 ⇔ 127 128 ⇔ 191 192 ⇔ 255	Big to small Auto change, slow to fast Slow zoom out, fast zoom in (slow to fast) Slow zoom in, fast zoom out (slow to fast)
18	**Frost**	000 ⇔ 004 005 ⇔ 255	No function Frost effect
19	**Control**	000 ⇔ 007 008 ⇔ 015 016 ⇔ 023 024 ⇔ 031 032 ⇔ 039 040 ⇔ 047 048 ⇔ 055 056 ⇔ 087 088 ⇔ 095 096 ⇔ 103 104 ⇔ 111 112 ⇔ 119 120 ⇔ 127 128 ⇔ 135 136 ⇔ 143 144 ⇔ 151 152 ⇔ 159 160 ⇔ 167 168 ⇔ 175 176 ⇔ 183 184 ⇔ 239 240 ⇔ 247 248 ⇔ 255	No function Blackout during pan/tilt Blackout while color wheel is moving Blackout while gobo wheel is moving Blackout while pan/tilt/moving color wheel Blackout while pan/tilt/moving gobo wheel Blackout while pan/tilt/moving color wheel/ moving gobo wheel No function No function Pan reset Tilt reset Color Reset Gobo reset No function Prism reset No function All reset Iris reset Frost reset Zoom reset No function No function No function

6. TECHNICAL INFORMATION

Product Maintenance

To maintain optimum performance and minimize wear, clean this product frequently. Usage and environment are contributing factors in determining the cleaning frequency.

Clean this product at least twice a month. Dust build-up reduces light output performance and can cause overheating. This can lead to reduced light source life and increased mechanical wear.

To clean the product:

1. Unplug the product from power.
2. Wait until the product is at room temperature.
3. Use a vacuum (or dry compressed air) and a soft brush to remove dust collected on the external vents.
4. Clean all transparent surfaces with a mild soap solution or ammonia-free glass cleaner.
5. Apply the solution directly to a soft, lint free cotton cloth or a lens cleaning tissue.
6. Softly drag any dirt or grime to the outside of the transparent surface.
7. Gently polish the transparent surfaces until they are free of haze and lint.

Always dry the transparent surfaces carefully after cleaning them.

7. TECHNICAL SPECIFICATIONS

Dimensions and Weight

Length	Width	Height	Weight
14.68 in (373 mm)	11.1 in (282 mm)	23.66 in (601 mm)	50 lb (22.7 kg)

Note: Dimensions in inches rounded to the nearest decimal digit.

Power

Power Supply Type	Range	Voltage Selection
Switching (internal)	100 to 240 VAC, 50/60 Hz	Auto-ranging

Parameter	120 V, 60 Hz	208 V, 60 Hz	230 V, 50 Hz
Consumption	514 W	488 W	492 W
Operating Current	6.21 A	2.35 A	3.10 A
Power linking current (products)	11 A (3 products)	32 A (5 products)	66 A 6 products)
Fuse	F 7 A, 250 V	F 7 A, 250 V	F 7 A, 250 V

Power I/O	U.S./Worldwide	UK/Europe
Power input connector	Neutrik powerCON	Neutrik powerCON
Power output connector	Neutrik powerCON	Neutrik powerCON
Power Cord plug	Edison (U.S.)	Local Plug

Light Source

Type	Power	Lifespan
LED	300 W	50,000 hours

Color	Quantity	Current
Cool White	1	8.8 A

Photometrics

Parameter	Value
Strobe Rate	0 to 22 Hz
Beam Angle	12° to 36°
Field Angle	13° to 37°
Zoom Angle	13° to 37°
Illuminance (13°) @ 5 m	12,828 lux
Illuminance (37°) @ 5 m	1,768 lux

Thermal

Maximum External Temperature	Cooling System
113 °F (45 °C)	Fan cooled

DMX

I/O Connector	Channel Range
3- and 5-pin XLR	19 or 25

Ordering

Product Name	Item Code	UPC Number
Rogue R3 Spot	08111414	781462217624

UL 1573
CSA C22.2 No. 166
E113093

Photometric Charts

	Narrow (13°)		Rogue R3 Spot (Imperial)		Wide (37°)	
Distance	**Beam Diameter**	**Field Diameter**	**Footcandle**	**Footcandle**	**Beam Diameter**	**Field Diameter**
15 ft	3.15 ft	3.42 ft	1,425	196	9.75 ft	10.04 ft
20 ft	4.20 ft	4.56 ft	802	111	13.00 ft	13.38 ft
30 ft	6.31 ft	6.84 ft	356	49	19.50 ft	20.08 ft
40 ft	8.41 ft	9.11 ft	200	28	25.99 ft	26.77 ft
50 ft	10.51 ft	11.39 ft	128	18	32.49 ft	33.46 ft
75 ft	15.77 ft	17.09 ft	57	8	48.74 ft	50.19 ft
100 ft	21.02 ft	22.79 ft	32	4	64.98 ft	66.92 ft
125 ft	26.28 ft	28.48 ft	21	3	81.23 ft	83.65 ft
150 ft	31.53 ft	34.18 ft	14	2	97.48 ft	100.38 ft

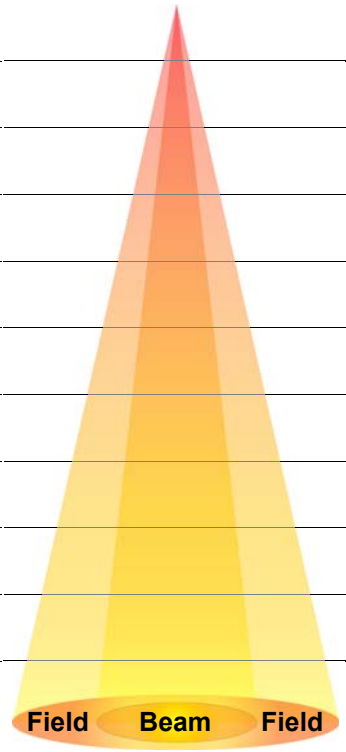

	Narrow (13°)		Rogue R3 Spot (Metric)		Wide (37°)	
Distance	**Beam Diameter**	**Field Diameter**	**Lux**	**Lux**	**Beam Diameter**	**Field Diameter**
1 m	0.21 m	0.23 m	320,700	44,200	0.65 m	0.67 m
2 m	0.42 m	0.46 m	80,175	11,050	1.30 m	1.34 m
5 m	1.05 m	1.14 m	12,828	1,768	3.25 m	3.35 m
8 m	1.68 m	1.82 m	5,011	691	5.20 m	5.35 m
10 m	2.10 m	2.28 m	3,207	442	6.50 m	6.69 m
15 m	3.15 m	3.42 m	1,425	196	9.75 m	10.04 m
20 m	4.20 m	4.56 m	802	111	13.00 m	13.38 m
25 m	5.26 m	5.70 m	513	71	16.25 m	16.73 m
30 m	6.31 m	6.84 m	356	49	19.50 m	20.08 m

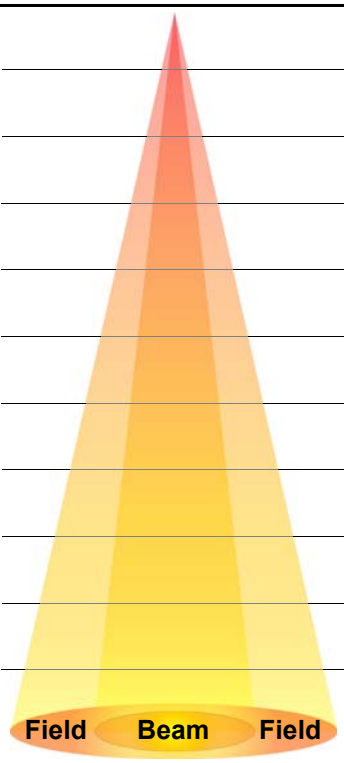

RETURNS

Send the product prepaid, in the original box, and with the original packing and accessories. Chauvet will not issue call tags.

Call Chauvet and request a Return Merchandise Authorization (RMA) number before shipping the product. Be prepared to provide the model number, serial number, and a brief description of the cause(s) for the return.

Clearly label the package with an RMA number. Chauvet will refuse any product returned without an RMA number.

Write the RMA number on a properly affixed label. DO NOT write the RMA number directly on the box.

Once you have the RMA number, provide the following information on a piece of paper and place it inside the box:

- Your name
- Your address
- Your phone number
- RMA number
- A brief description of the problem

Be sure to pack the product properly. Any shipping damage resulting from inadequate packaging will be your responsibility. FedEx packing or double-boxing are recommended.

Chauvet reserves the right to use its own discretion to repair or replace returned product(s).

CONTACT US

General Information	Technical Support
World Headquarters	
Address: 5200 NW 108th Ave. Sunrise, FL 33351 Voice: (954) 577-4455 Fax: (954) 929-5560 Toll Free: (800) 762-1084	Voice: (844) 393-7575 Fax: (954) 756-8015 Email: chauvetcs@chauvetlighting.com Website: www.chauvetprofessional.com
UK	
Address: Unit 1C Brookhill Road Industrial Estate Pinxton, Nottingham, UK NG16 6NT Voice: +44 (0) 1773 511115 Fax: +44 (0) 1773 511110	Email: UKtech@chauvetlighting.eu Website: www.chauvetprofessional.eu
Benelux	
Address: Stokstraat 18 9770 Kruishoutem Belgium Voice: +32 9 388 93 97	Email: BNLtech@chauvetlighting.eu Website: www.chauvetprofessional.eu
France	
Address: 3, Rue Ampère 91380 Chilly-Mazarin France Voice: +33 1 78 85 33 59	Email: FRtech@chauvetlighting.fr Website: www.chauvetprofessional.eu
Germany	
Address: Bruno-Bürgel-Str. 11 28759 Bremen Germany Voice: +49 421 62 60 20	Email: DEtech@chauvetlighting.de Website: www.chauvetprofessional.eu
Mexico	
Address: Av. de las Partidas 34 - 3B (Entrance by Calle 2) Zona Industrial Lerma Lerma, Edo. de México, CP 52000 Voice: +52 (728) 690-2010	Email: servicio@chauvet.com.mx Website: www.chauvetprofessional.mx

Visit the applicable website above to verify our contact information and instructions to request support. Outside the U.S., United Kingdom, Ireland, Mexico, France, Germany, or Benelux, contact the dealer of record.